HEALTH RISK ASSESSMENT FOR:

UPTOWN NEWPORT

prepared for:

CITY OF NEWPORT BEACH

Contact:
Ms. Rosalinh Ung
Associate Planner

prepared by:

THE PLANNING CENTER | DC&E

Contact:
Steven Bush, E.I.T.
Project Scientist
Cathleen Fitzgerald, P.E.
Senior Engineer

MARCH 2012

HEALTH RISK ASSESSMENT FOR:

UPTOWN NEWPORT

prepared for:

CITY OF NEWPORT BEACH

3300 Newport Boulevard
Newport Beach, CA 92663
949.644.3208

Contact:
Ms. Rosalinh Ung
Associate Planner

prepared by:

THE PLANNING CENTER | DC&E

9841 Airport Boulevard, Suite 1010
Los Angeles, CA 90045
Tel: 310.670.9221 • Fax: 310.670.9512
Website: www.planningcenter.com

Contact:
Steven Bush, E.I.T.
Project Scientist
Cathleen Fitzgerald, P.E.
Senior Engineer

CNB-13.OE

MARCH 2012

Table of Contents

Section		Page
1.	**INTRODUCTION**	**1**
2.	**PROJECT DESCRIPTION**	**2**
3.	**SOURCE IDENTIFICATION**	**4**
4.	**SOURCE CHARACTERIZATION**	**6**
4.1	STATIONARY SOURCES	6
5.	**EXPOSURE QUANTIFICATION**	**8**
6.	**RISK CHARACTERIZATIONS**	**9**
6.1	CARCINOGENIC CHEMICAL RISK	9
6.2	NONCARCINOGENIC HAZARDS	10
7.	**CONCLUSIONS**	**11**
8.	**REFERENCES**	**12**

APPENDICES

Appendix A. SCAQMD Data
Appendix B. Graphical Representation of Emitting Sources
Appendix C. Emission Rate Calculations
Appendix D. ISCST3 Model Output Files
Appendix E. Risk Calculation Worksheets

List of Figures

Figure		Page
Figure 1	Site Location/Vicinity Aerial Photograph	3
Figure 2	Emission Sources	5

List of Tables

Table		Page
Table 1	Emission Sources	4
Table 2	Chemical Compounds Emitted from Each Facility	6

1. Introduction

The project applicant, Uptown Newport LP, is seeking approval from the City of Newport Beach for development of the Uptown Newport mixed-use development. The proposed project would develop 1,244 residential units and 11,500 square feet of retail space on a 25.05-acre site currently occupied by the Jazz Semiconductor, Inc. facility. The project site is in the City of Newport Beach in Orange County and is bounded by Jamboree Road on the east, Birch Street on the north, and Von Karman Avenue and MacArthur Boulevard on the west.

Guidance from the California Environmental Protection Agency (Cal/EPA), Office of Environmental Health Hazard Assessment (OEHHA), and California Air Pollution Control Officers Association (CAPCOA) recommend the completion of health risk assessments to determine the impacts of hazardous air emissions upon land use projects that place receptors in the vicinity of existing sources. The procedures described in the OEHHA guidance document, *Air Toxics Hot Spots Program Guidance Manual for Preparation of Health Risk Assessments* (2003), were followed during this evaluation. A number of other technical references also were used and are cited in the reference section.

The completion of this assessment involved the following tasks:

- Facilities within a 1,000 foot radius of the proposed site that might reasonably emit hazardous or acutely hazardous air emissions were identified and evaluated. Emissions from the existing Jazz Semiconductor facility were included for Phase I of the proposed development.

- Air dispersion modeling, using the Industrial Source Complex Short-Term (ISCST3) computer model, was conducted to quantify maximum ground-level concentrations for receptors at the project site. Meteorological data from the nearest South Coast Air Quality Management District (SCAQMD) monitoring station with similar meteorological conditions were used to represent local weather conditions and prevailing winds.

- Cancer and noncancer risks to persons residing at the project site were determined, based on the results of the ISCST3 modeling. The assessment considered exposure through the inhalation pathway. Unit Risk Factors (URFs) were used to determine carcinogenic risk and Recommended Exposure Limits (RELs) were used to determine noncarcinogenic risk.

- A health risk assessment report was prepared that compared the calculated risks with thresholds established under the California Safe Drinking Water and Toxic Enforcement Act (Proposition 65) and CARB's Air Toxics "Hot Spots" Program (AB2588).

2. Project Description

The project would redevelop the existing industrial uses with a mix of residential, commercial, and open space land uses. Up to 1,244 residential units, 11,500 square feet of commercial space, and two acres of park space are proposed. Residential land use would be a mix of townhomes, mid-rise and high-rise condominiums, and affordable housing.

The project site is located in the City of Newport Beach, California and is bounded by Jamboree Road on the east, Birch Street on the north, and Von Karman Avenue and MacArthur Boulevard on the west. Surrounding land use consists of Campus Office Park development (part of the Koll Center) to the north, south, and west, and undeveloped open space (part of the North Campus of the University of California, Irvine) to the east. The site is currently developed with two industrial buildings, which are leased to Jazz Semiconductor. The building at 4311 Jamboree Road, in the southwestern part of the project site, is one story and 135,975 square feet; the building at 4321 Jamboree Road is four stories and 311,452 square feet. The balance of the site is developed with landscaped areas and surface parking lots; the parking lots are in the eastern and northern part of the site.

Phase 1 would include demolition of the existing single-story office building at 4311 Jamboree and development of the westerly portion of the property, including the frontage along Jamboree Road. The first phase would also include development of 680 residential units, 11,500 square feet of neighborhood commercial use, a 1.03-acre park, and roadways for access and internal circulation. The Jazz Semiconductor fabrication facility at 4321 Jamboree Road would continue operating during construction and initial operation of Phase 1. Development of Phase 1 is projected to start in 2014 and be completed in 2017.

Phase 2 would include demolition of the remaining Jazz Semiconductor fabrication building and development of approximately 564 residential units, a 1.02-acre park, and internal roadways. Development of Phase 2 is anticipated to begin in 2017 and be completed in 2021.

The project site, phasing plan, and vicinity are depicted in Figure 1.

Site Location/Vicinity Aerial Photograph

Site Boundary Phase 1 Phase 2

0 500
Scale (Feet)

Source: Google Earth Pro 2012

3. Source Identification

Properties within a 1,000 foot radius of the proposed project were surveyed to identify facilities that have the potential to generate hazardous and acutely hazardous air emissions. Additionally, data obtained through the South Coast Air Quality Management District (SCAQMD) were reviewed to assist in the identification of potential emitters. A copy of the data obtained through SCAQMD is contained in Appendix A. A summary of the stationary emissions sources evaluated during this assessment is provided below in Table 1. Figure 2 shows the locations of the emissions sources with respect to the site.

Table 1
Emission Sources

Source	Address
Burger King	5180 Birch Street, Newport Beach, California 92660
Conexant Systems Inc.	4000 MacArthur Boulevard, Newport Beach, California 92660
Mindspeed	4000 MacArthur Boulevard, Newport Beach, California 92660
Jazz Semiconductor	4321 Jamboree Road, Newport Beach, California 92660
Harbor Justice Center, Newport Beach Facility	4601 Jamboree Road, Newport Beach, California 92660
Impac Funding Co.	19500 Jamboree Road, Irvine, California 92612
Kimera Restaurant/John Ghoukassian	19530 Jamboree Road, Irvine, California 92612
The Pacific Club, Inc.	4110 MacArthur Boulevard, Newport Beach, California 92660
Newport Corporate Tower	4100 Newport Place, Newport Beach, California 92660

Emission Sources

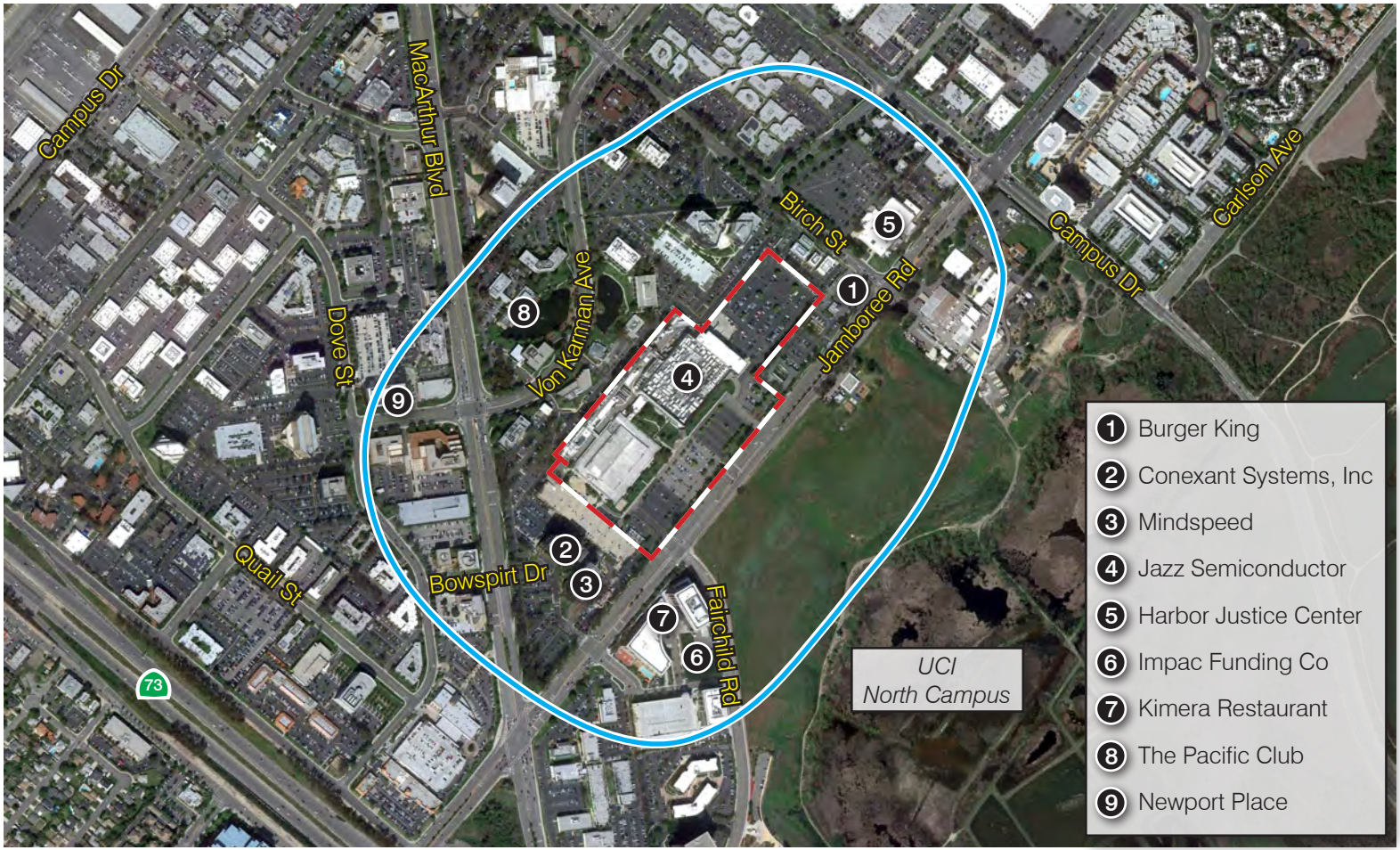

Site Boundary

1,000-ft Radius

0 1,000
Scale (Feet)

Source: Google Earth Pro 2012

4. Source Characterization

4.1 STATIONARY SOURCES

Contaminant release information and associated chemical species were identified through a review of available documentation for each source referenced in Section 3. To the degree practical, all contaminant emissions generated from each source location were considered in the analysis. The limiting factor for the inclusion of a compound was the availability of published exposure factors and other toxicity data enabling risks to be quantified and, where appropriate, target organs identified. The compounds emitted from each source are listed in Table 2.

Table 2
Chemical Compounds Emitted from Each Facility

Source	Contaminant
Burger King	Acetaldehyde
Conexant Systems Inc.	Diesel Particulate
Mindspeed	Diesel Particulate
Jazz Semiconductor	Diesel Particulate 1,3-Butadiene Acetaldehyde Acrolein Ammonia Benzene Benzyl chloride Carbon tetrachloride Chloroform Dichlorobenzene Dichloroethane Ethylbenzene Ethylene dibromide Formaldehyde Methylene chloride MTBE n-Hexane Naphthalene Tetrachloroethane Tetrachloroethylene Trichloroethane Trichloroethylene Toluene Vinyl chloride Xylenes
Harbor Justice Center, Newport Beach Facility	Diesel Particulate Acetaldehyde Acrolein Ammonia Benzene Ethylbenzene Formaldehyde

Table 2
Chemical Compounds Emitted from Each Facility

Source	Contaminant
	n-Hexane Naphthalene Toluene Xylenes
Impac Funding Co.	Diesel Particulate
Kimera Restaurant/John Ghoukassian	Acetaldehyde
The Pacific Club	Acetaldehyde
Newport Place	Diesel Particulate

5. Exposure Quantification

To assess the impact of emitted compounds on residents of the proposed project, air quality modeling using the Industrial Source Complex-Short Term (ISCST3) model was performed. The model is a steady state Gaussian plume model and is used by Cal/EPA for estimating ground level impacts from point and fugitive sources in simple and complex terrain.

The model requires additional input parameters, including chemical emission data and local meteorology. Inputs for each emitting source were based on the characterizations referenced in Section 4. Meteorological data provided by SCAQMD for Costa Mesa (1981) were used to represent local weather conditions and prevailing winds.

The modeling analysis also considered the spatial distribution of each emitting source in relation to the proposed residential site. To accommodate the model's Cartesian grid format, direction-dependent calculations were obtained by identifying the Universal Transverse Mercator coordinates for each source.

Two different receptor grids were used in the analysis. For Phase I of the project, receptors were placed within the boundaries of the Phase I site with a grid spacing of 10 meters and it was assumed that Jazz Semiconductor was in operation. Emissions from this facility were included in the Phase I evaluation. For Phase II, it was assumed that Jazz Semiconductor was no longer in operation and receptors were placed within the boundaries of both the Phase I and Phase II development with a grid spacing of 10 meters.

The configurations of the stationary sources are presented in Appendix B. The ISCST3 model output data are presented in Appendix C.

6. Risk Characterizations

6.1 CARCINOGENIC CHEMICAL RISK

Carcinogenic compounds are not considered to have threshold levels (i.e., dose levels below which there are no risks). Any exposure, therefore, will have some associated risk. As a result, the State of California has established a threshold of one in one hundred thousand (1.0E–05) as a level posing no significant risk for exposures to carcinogens regulated under the Safe Drinking Water and Toxic Enforcement Act (Proposition 65).

Health risks associated with exposure to carcinogenic compounds at the proposed site can be defined in terms of the probability of developing cancer as a result of exposure to a chemical at a given concentration. Under a deterministic approach (i.e., point estimate methodology), the cancer risk probability is determined by multiplying the chemical's annual concentration by its unit risk factor (URF), a measure of the carcinogenic potential of a chemical when a dose is received through the inhalation pathway. It is an upper-limit estimate of the probability of contracting cancer as a result of continuous exposure to an ambient concentration of one microgram per cubic meter ($\mu g/m^3$) over a lifetime of 70 years.

Once determined, contaminant dose is multiplied by the cancer potency factor in units of inverse dose expressed in milligrams per kilogram per day $(mg/kg/day)^{-1}$ to derive the cancer risk estimate. Therefore, to accommodate the unique exposures associated with the proposed school population, the following dose algorithm was used.

$$CDI = (C_{air} \times EF \times ED \times IR) / (BW \times AT)$$

Where:

CDI	=	chronic daily intake (mg/kg/day)
C_{air}	=	concentration of contaminant in air ($\mu g/m^3$)
EF	=	exposure frequency (days/year)
ED	=	exposure duration (years)
IR	=	inhalation rate (m^3/day)
BW	=	body weight (kg)
AT	=	averaging time (days)

The URFs used in the assessment and corresponding cancer potency factors were obtained principally from OEHHA guidance. For compounds not listed in the OEHHA database, toxicity values from the USEPA's Integrated Risk Information System were used.

The assessment employed the USEPA's guidance to develop viable dose estimates based on reasonable maximum exposure, defined as the "highest exposure that is reasonably expected to occur" for a given receptor population. Lifetime risk values for the residents were adjusted to account for an exposure of 350 days per year for 70 years.

Because the Jazz Semiconductor facility will be demolished during Phase II of construction, the exposure duration to residents of emissions from this facility was adjusted accordingly. Residents will

occupy Phase I of the project as early as 2018, and the latest estimated date for the construction of Phase II to be completed is 2027. To be conservative, lifetime risk values for the residents occupying the site during Phase I were adjusted to account for an exposure to the Jazz Semiconductor facility of 350 days per year for 9 years (2018-2027).

Discrete variates for body weight and inhalation were obtained from relevant distribution profiles presented in the OEHHA guidance document, *Air Toxic Hot Spots Program Risk Assessment Guidelines, Part IV: Technical Support Document for Exposure Assessment and Stochastic Analysis*.

Appendix E, Tables E1 and E2 columns f–g, present the URFs and corresponding cancer potency factors for carcinogens considered in the assessment. The cancer risk attributed to each chemical exposure and summation of those risks are presented in column h.

6.2 NONCARCINOGENIC HAZARDS

An evaluation of the potential noncancer effects of chronic chemical exposures was also conducted. Under the point estimate approach, adverse health effects are evaluated by comparing the annual ground level concentration of each chemical compound with the appropriate Reference Exposure Level (REL). Available RELs promulgated by OEHHA were considered in the assessment. For compounds not listed in the OEHHA database, REL's from the U. S. EPA Integrated Risk Information System were utlized.

When inhalation and/or oral toxicity values were not available from these sources, USEPA Region IX Preliminary Remediation Goal (PRG) values were used. And finally, if no information was available from any of the above sources, informal inhalation concentrations were developed by converting occupational exposure levels (i.e., Threshold Limit Values) derived by the American Conference of Governmental Industrial Hygienists to a lifetime exposure, as follows:

$$(\text{TLV in mg/m}^3) \times (10\ \text{m}^3/\text{day}) \times (5\ \text{days}/7\ \text{days}) \times (70\ \text{kg})^{-1} \times (\text{Uncertainty Factor of } 0.1) = \text{mg/kg/day}$$

The exposure level expressed in mg/kg/day may additionally be converted to μg/m3 by the following:

$$(\text{mg/kg/day}) \text{ X } (70\ \text{kg}) \text{ X } (1{,}000\ \mu\text{g/mg}) \ / \ (20\ \text{m}^3/\text{day}) = \mu\text{g/m}^3$$

To quantify noncarcinogenic impacts, the hazard index approach was used. The hazard index assumes that chronic subthreshold exposures adversely affect a specific organ or organ system (toxicological endpoint). For each discrete chemical exposure, target organs presented in regulatory guidance were used. To calculate the hazard index, each chemical concentration or dose is divided by the appropriate toxicity value. For compounds affecting the same toxicological endpoint, this ratio is summed. Where the total equals or exceeds one, a health hazard is presumed to exist. In a manner consistent with the assessment of carcinogenic exposures, REL/RfC values were converted to units expressed in mg/kg/day to accommodate the above intake algorithm.

Appendix E, Tables E1 and E2, columns i–j, present the relevant exposure concentrations and corresponding reference dose values used in the evaluation of noncarcinogenic exposures. The noncancer hazard quotient for identified compounds generated from each source and a summation for each toxicological endpoint are presented in columns k–r.

7. Conclusions

Results of the health risk assessment indicate that the incremental cancer risk for a resident at the project site, based on the maximum ground-level concentration for a 70-year, 24-hour outdoor exposure duration is 2.6×10^{-6} (2.6 in one million) for residents of Phase I and 5.2×10^{-7} (5.2 in ten million) for residents of Phase II. In comparison to the threshold level of 1.0×10^{-5} (one in a hundred thousand), calculated carcinogenic risks are well below the threshold value for residents of the project. For non-carcinogenic effects, the hazard index identified for each toxicological endpoint totaled less than one for residents of both Phase I and Phase II. Therefore, chronic non-carcinogenic hazards also were predicted to be within acceptable limits.

Based on a comparison to the carcinogenic and non-carcinogenic thresholds established under the California Safe Drinking Water and Toxic Enforcement Act (Proposition 65) and OEHHA, hazardous air emissions generated from facilities within a 1,000-foot radius are not anticipated to pose an actual or potential endangerment to occupants of the proposed Uptown Newport project.

8. References

American Conference of Industrial Hygienists. 2009. *Threshold Limit Values (TLVs) and Biological Exposure Indices (BEIs)*.

California Air Pollution control Officers Association (CAPCOA). 2009. *Health Risk Assessments for Proposed Land Use Project.* Dated July 2009.

California Air Resources Board (CARB). 2011. *Emfac2011 - Calculating Emission Inventories for Vehicles in California*.

Office of Environmental Health Hazard Assessment (OEHHA). 2012. *Toxicity Criteria Database*. http://oehha.ca.gov/risk/chemicaldb/index.asp. Accessed March 14, 2012.

———. 2003. *Air Toxic Hot Spots Program Risk Assessment Guidelines.*

———. 2003. *Guidance for School Site Risk Assessment Pursuant to Health and Safety Code Section 901(f): Guidance for Assessing Exposures and Health Risks at Existing and Proposed School Sites*. Final Draft Report.

———. 2000. *Air Toxic Hot Spots Program Risk Assessment Guidelines. Part IV: Technical Support Document for Exposure Assessment and Stochastic Analysis*.

South Coast Air Quality Management District (SCAQMD). *Historical Data By Year.* http://www.aqmd.gov/smog/historicaldata.htm. Accessed February 20, 2012.

———. 2012. *Facility Information Detail (FIND)*. http://www.aqmd.gov/webappl/fim/prog/search.aspx. Accessed February 20, 2012.

———. 2010. *Supplemental Instructions, Reporting Procedures for AB2588 Facilities for Reporting their Quadrennial Air Toxics Emissions Inventory*.

———. 2008. *Localized Significance Threshold Methodology.* Revised July 2008.

———. 1981. *Meteorological Data Set for Costa Mesa*.

United States Environmental Protection Agency (USEPA). 2010. *Regional Screening Levels (formerly PRGs)*. http://www.epa.gov/region9/superfund/prg. March 14, 2012.

———. 2012. *Integrated Risk Information System (IRIS)*. http://www.epa.gov/IRIS. Accessed March 14, 2012.

———. 1995. Office of Air Quality Planning and Standards. *User's Guide for the Industrial Source Complex (ISC3) Dispersion Models*. Volumes I and II. EPA-454/B-95-003a and b.

———. 1986. *Guideline on Air Quality Models* (Revised). EPA-450/2-78-027R.

Appendix A.
SCAQMD Data

Emission Sources
Uptown Newport Health Risk Assessment

SOURCE	FACILITY	SCAQMD ID	ADDRESS			CITY	STATE	ZIP	NOTES
1	BURGER KING	117484	5180	BIRCH	ST	NEWPORT BEACH	CA	92660	Charbroiler
2	CONEXANT SYSTEMS INC	117420	4000	MACARTHUR	BLVD	NEWPORT BEACH	CA	92660	Emergency diesel generator, west tower
3	MINDSPEED	165586	4000	MACARTHUR	BLVD	NEWPORT BEACH	CA	92660	Emergency diesel generator, east tower
4	NEWPORT FAB, LLC, DBA JAZZ SEMICONDUCTOR	131732	4321	JAMBOREE	RD	NEWPORT BEACH	CA	92660	Semiconductor manufacturing, including natural gas boilers, emergency diesel generators, and trucking activity
	JACOB AND HEFNER ASSOCIATES INC	160726	4321	JAMBOREE	RD	NEWPORT BEACH	CA	92660	Soil Vapor Extraction system
5	HARBOR JUSTICE CENTER	163996	4601	JAMBOREE	RD	NEWPORT BEACH	CA	92660	Emergency diesel generator and natural gas boiler
6	IMPAC FUNDING CO	148580	19500	JAMBOREE	RD	IRVINE	CA	92612	Emergency diesel generator
7	JOHN GHOUKASSIAN/BISTANGO, DBA KIMERA RESTAURANT	149684	19530	JAMBOREE	RD	IRVINE	CA	92612	Charbroiler
8	PACIFIC CLUB, INC., THE	86317	4110	MACARTHUR	BLVD	NEWPORT BEACH	CA	92660	Charbroiler
9	ADVENT REALTY L.P. FUND II/NEWPORT PLACE	115434	4100	NEWPORT	PL	NEWPORT BEACH	CA	92660	Emergency diesel generator
Omitted Facilities, Located at Proposed Project Site (Phase I)									
	CONEXANT SYSTEMS INC	19204	4311	JAMBOREE	RD	NEWPORT BEACH	CA	92660	Emergency diesel generator
	CONEXANT SYSTEMS INC	800210	4311	JAMBOREE	RD	NEWPORT BEACH	CA	92660	Charbroiler
Omitted Facilities, Outside 1,000 ft. Radius									
	TECOLOTE RESOURCES	129664	2465	CAMPUS	DR	IRVINE	CA	92612	
	BIXBY BIT 1201 DOVE ST, LLC	153482	1201	DOVE	ST	NEWPORT BEACH	CA	92660	
	METROPOLITAN LIFE INSURANCE CO	142431	1301	DOVE	ST	NEWPORT BEACH	CA	92660	
	NEWPORT LEXUS	148614	3901	MACARTHUR	BLVD	NEWPORT BEACH	CA	92660	
	THE IRVINE COMPANY LLC	154147	19800	MACARTHUR	BLVD	IRVINE	CA	92612	
	PLAZA-IRVINE OWNER'S ASSOC	150391	8000	SCHOLARSHIP	RD	IRVINE	CA	92612	

Appendix B.
Graphical Representation of Emitting Sources

Source 1
Burger King
5180 Birch Street
Newport Beach, CA 92660
Monday - Friday: 6:00 AM - 11:00 PM
Saturday - Sunday: 6:00 AM - 10:00 PM

Chemical and Use Rate
Charbroiler: Acetaldehyde

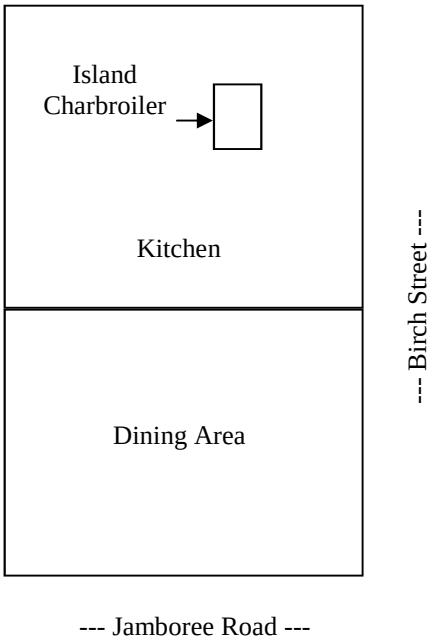

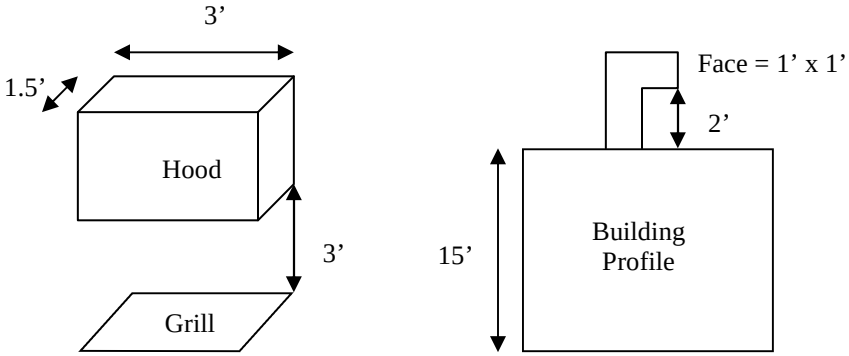

Note: The stack was not visible from street level. Stack data is based upon data collected at a similar business per *Health Risk Assessment for Aspire Charter School, Huntington Park, California* (The Planning Center, 2009).

Source 2
Conexant Systems Inc.
4000 MacArthur Boulevard
Newport Beach, CA 92660
Monday - Sunday: 12:00 AM - 11:59 PM

Chemical and Use Rate
Emergency Diesel Generator: 620 BHP, tested once per month at 6:00 AM for 30 minutes

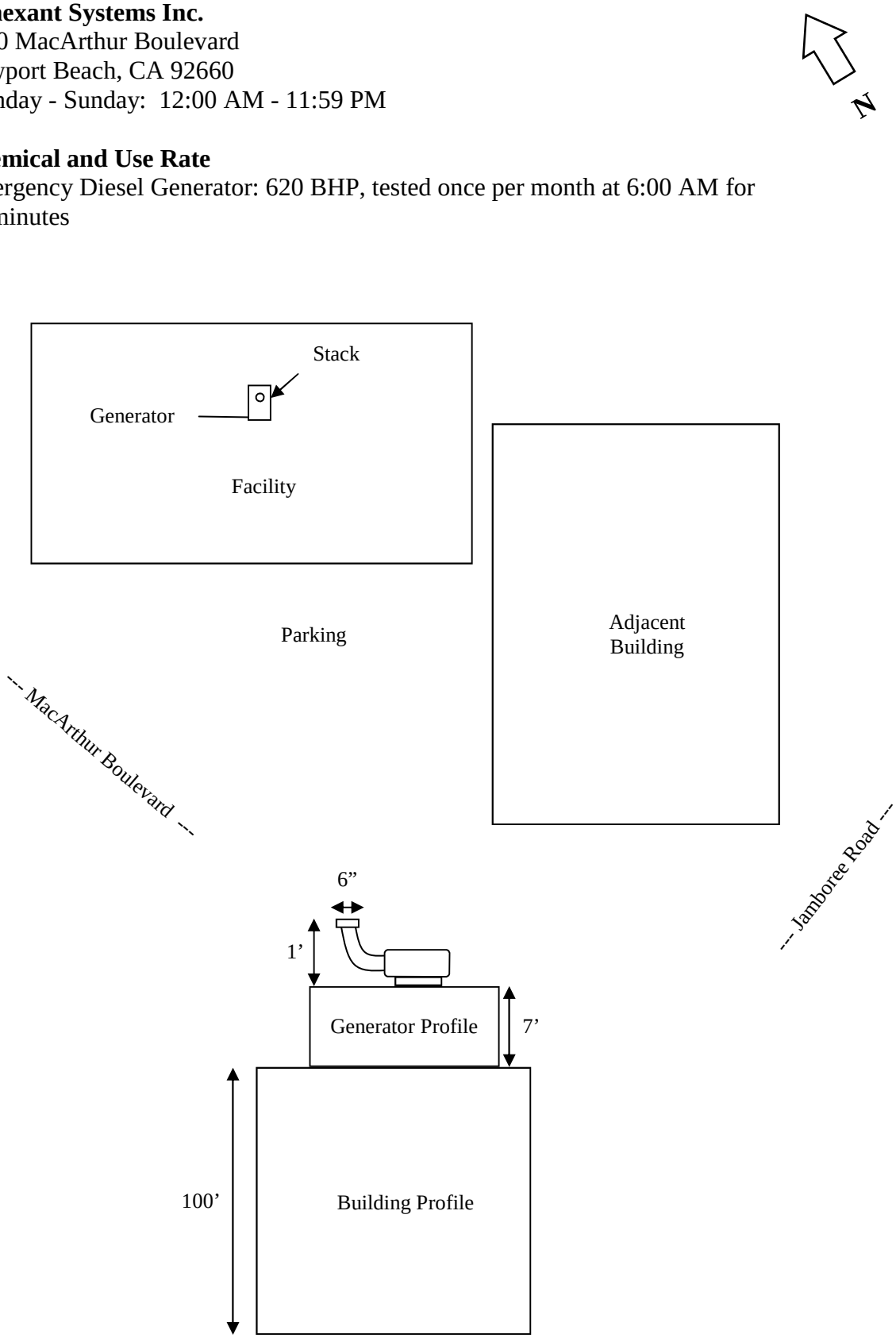

Source 3
Mindspeed
4000 MacArthur Boulevard
Newport Beach, CA 92660
Monday - Sunday: 12:00 AM - 11:59 PM

Chemical and Use Rate
Emergency Diesel Generator: 620 BHP, tested once per month at 6:00 AM for 30 minutes

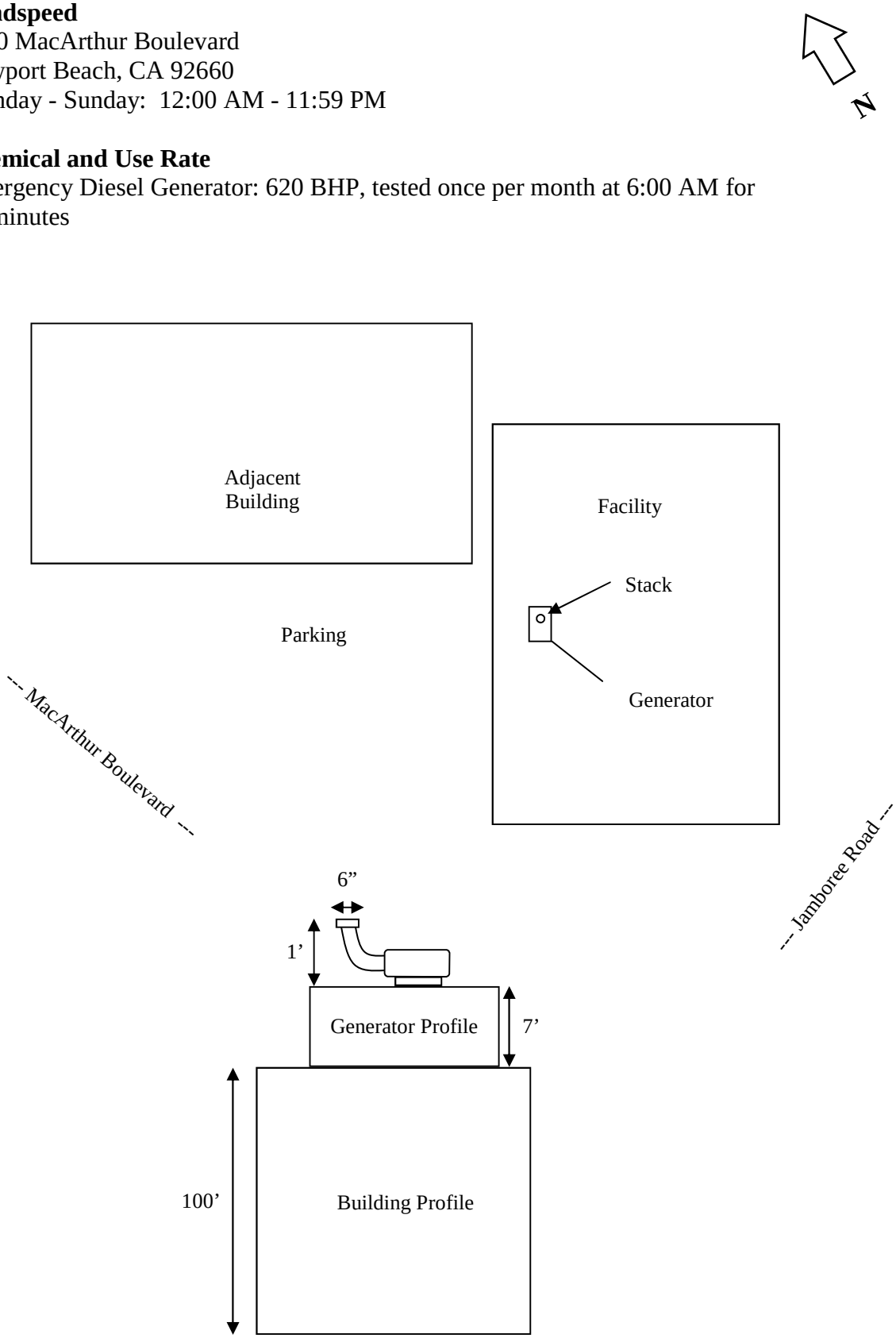

Sources 4A and 4B
Jazz Semiconductor
4321 Jamboree Road
Newport Beach, CA 92660
Monday - Sunday: 12:00 AM - 11:59 PM

Chemical and Use Rate
Emergency Diesel Generators (2): 1,588 BHP, tested once per month Saturday morning for 6 minutes
Steam Boilers (4): 8.5 million BTU per hr
Hot Water Boilers (3): 20.925 million BTU per hr

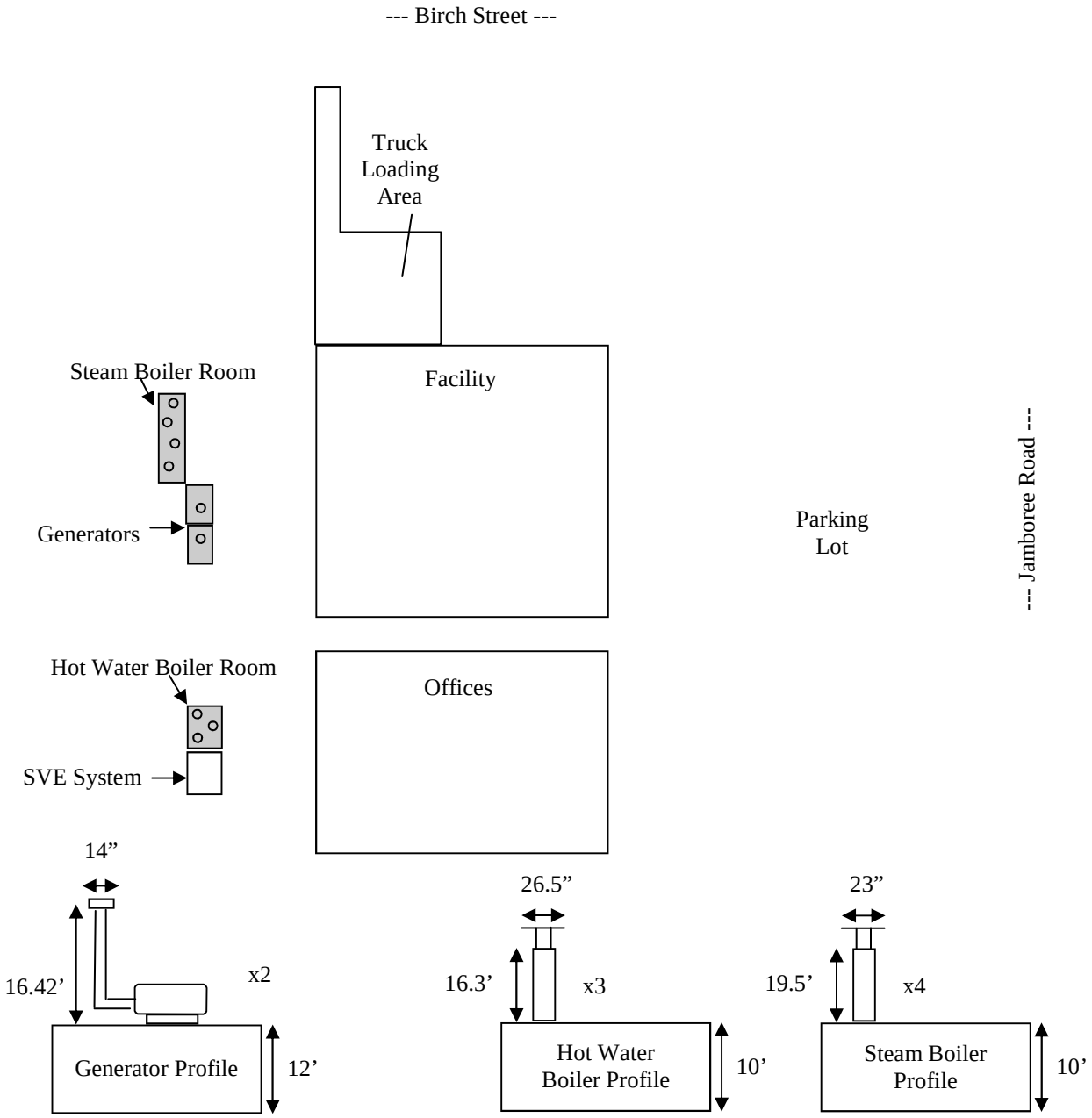

Sources 4C and 4D
Jazz Semiconductor
4321 Jamboree Road
Newport Beach, CA 92660
Shipping/Receiving Hours: Monday - Friday 8:00 AM - 5:00 PM
Soil Vapor Extraction System Hours: Monday - Sunday: 12:00 AM - 11:59 PM

Chemical and Use Rate
Heavy Duty Diesel Trucks: 16 truck trips per day
Soil Vapor Extraction System: blower flow rate of 500 standard cubic feet per minute

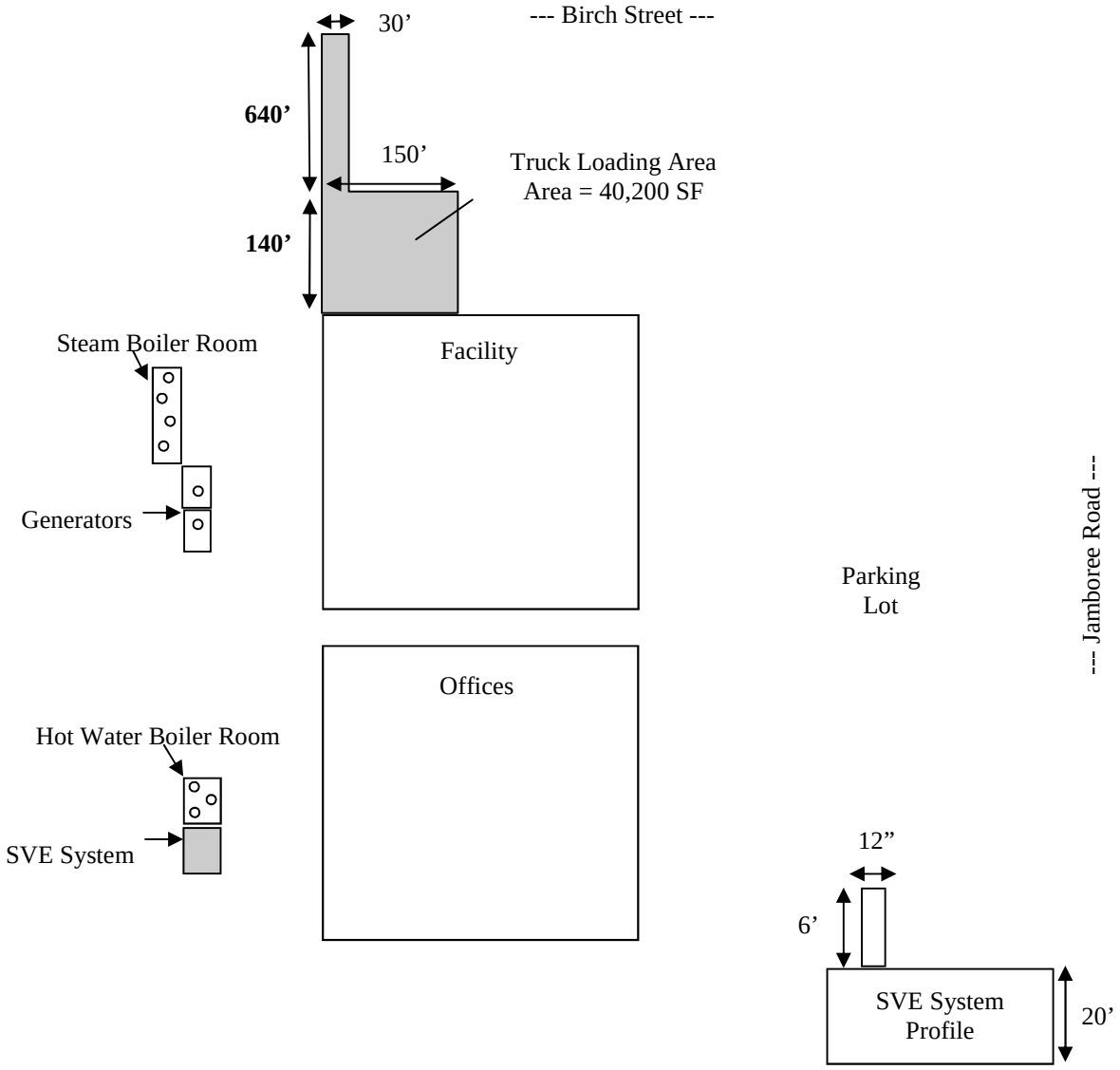

- Lot area is based upon Google Earth, Version 5.1.
- Release height of 4.15 m and initial vertical dimension (δy) of 1.93 m is based upon California Air Resources Board's "Risk Reduction Plan to Reduce Particulate Matter Emissions from Diesel-Fueled Engines and Vehicles" (2000).

Source 5A
Harbor Justice Center, Newport Beach Facility
4601 Jamboree Road
Newport Beach, CA 92660
Monday - Friday: 7:00 AM - 7:00 PM

Chemical and Use Rate
Emergency Diesel Generator: 75 BHP, tested once per month for 30 minutes

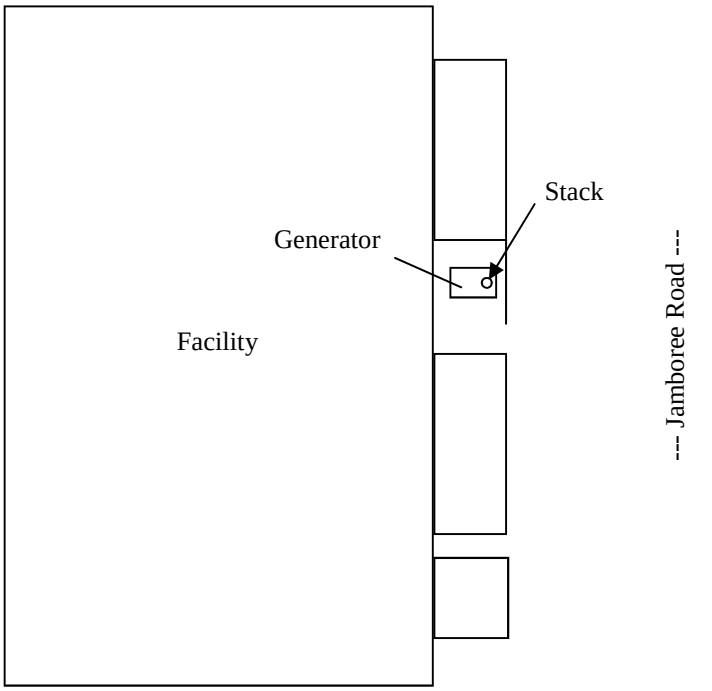

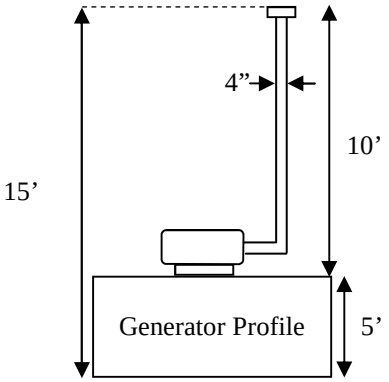

Source 5B
Harbor Justice Center, Newport Beach Facility
4601 Jamboree Road
Newport Beach, CA 92660
Monday - Friday: 7:00 AM - 7:00 PM

Chemical and Use Rate
Natural Gas Boiler: 3.0 Million BTU/hr

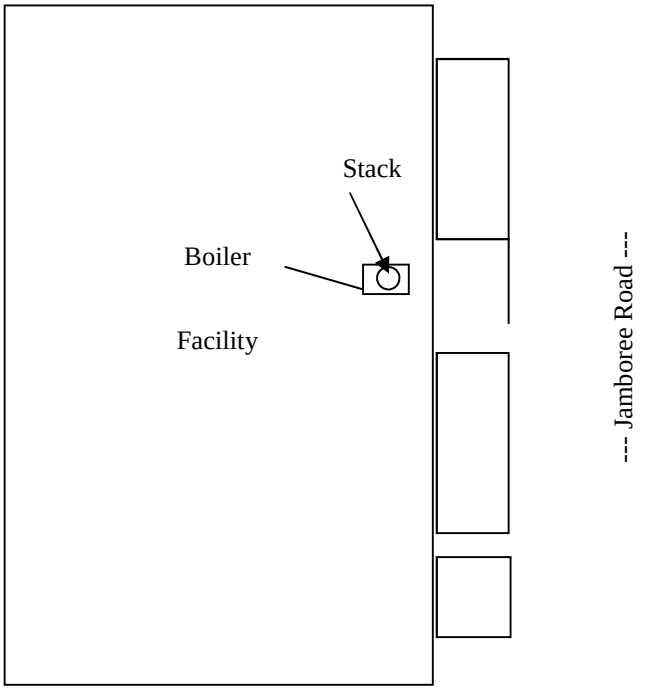

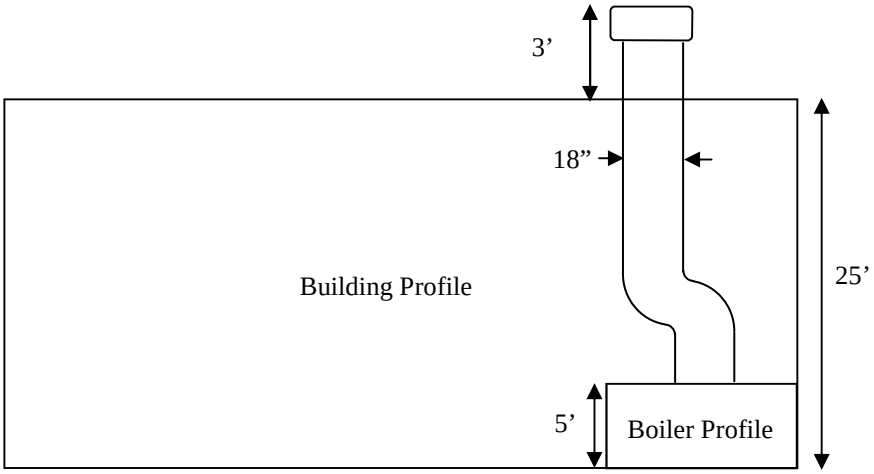

Source 6
Impact Funding Co.
19500 Newport Place Road
Newport Beach, CA 92660
Monday - Friday: 6:00 AM - 6:00 PM

Chemical and Use Rate
Emergency Diesel Generator: 2,220 BHP, tested once per week for 15 minutes

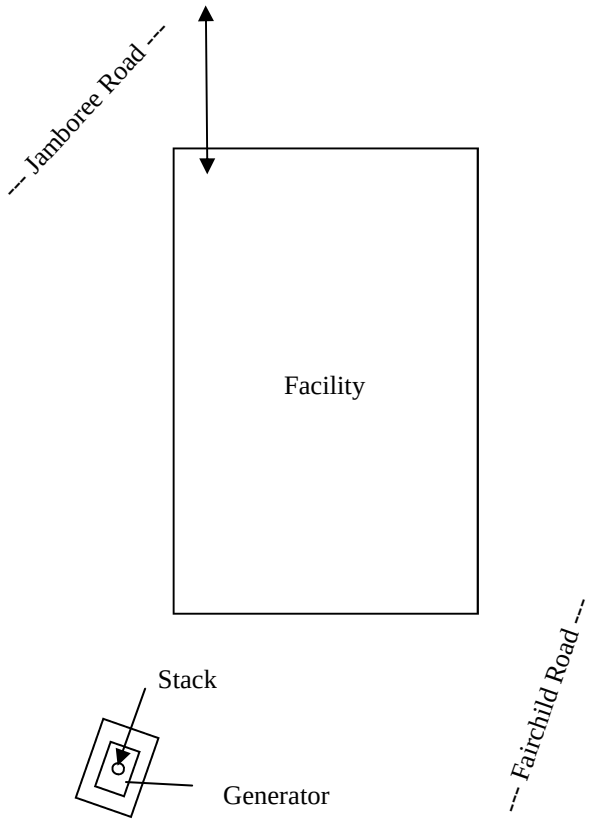

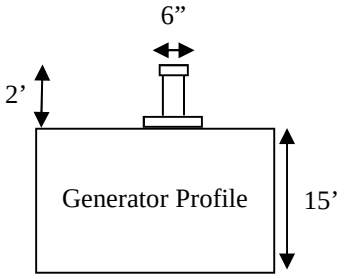

Source 7
Kimera Restaurant/John Ghoukassian
19530 Jamboree Road
Irvine, CA 92612
Monday - Thursday: 11:30 AM - 10:00 PM
Friday - Saturday: 11:30 AM - 12:00 AM

Chemical and Use Rate
Charbroiler: Acetaldehyde

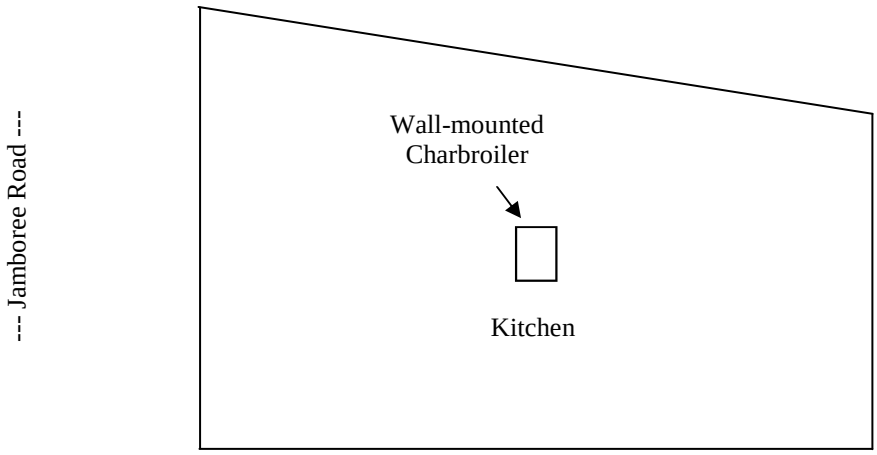

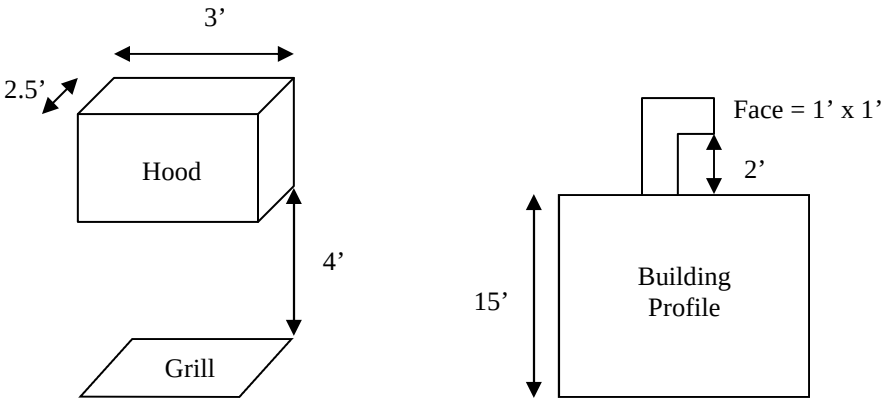

Note: The stack was not visible from street level. Stack data is based upon data collected at a similar business per *Health Risk Assessment for Aspire Charter School, Huntington Park, California* (The Planning Center, 2009).

Source 8
The Pacific Club, Inc.
4110 MacArthur Boulevard
Newport Beach, CA 92660
Monday - Saturday: 7:00 AM - 11:00 PM

Chemical and Use Rate
Charbroiler: Acetaldehyde

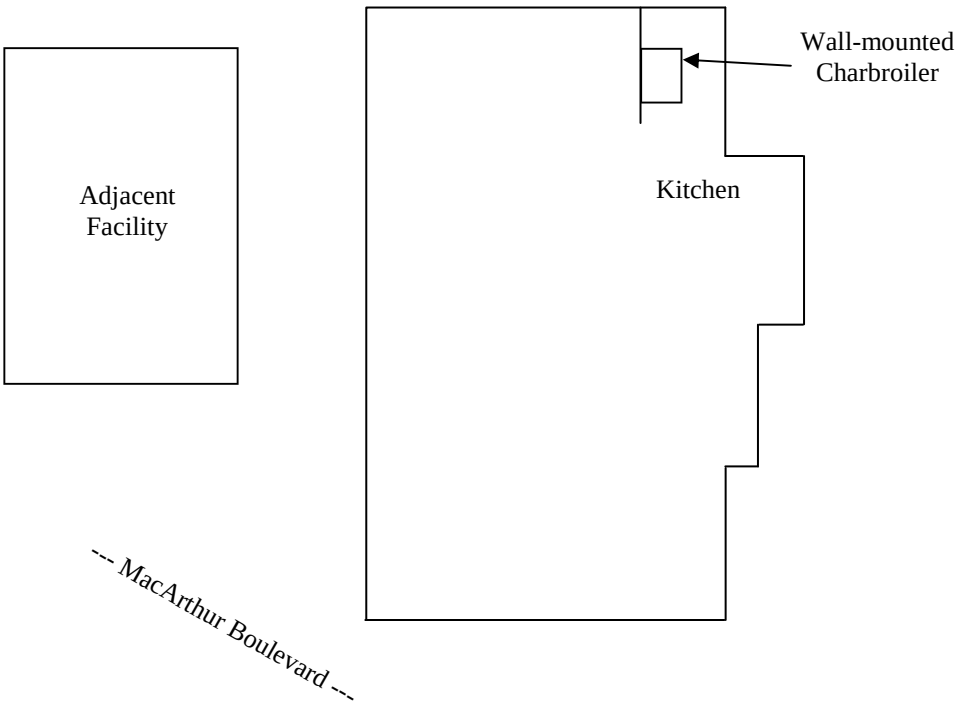

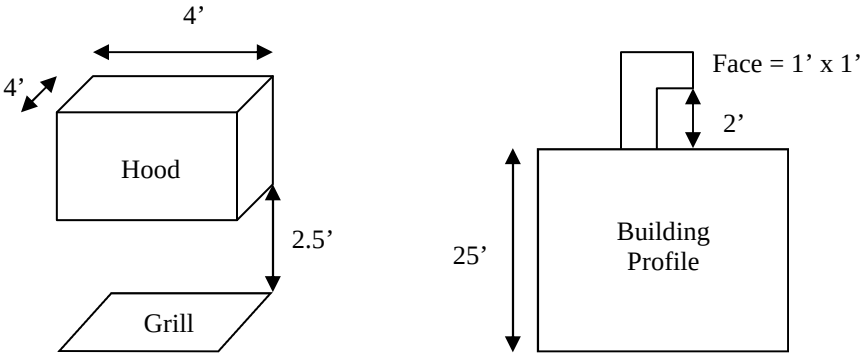

Note: The stack was not visible from street level. Stack data is based upon data collected at a similar business per *Health Risk Assessment for Aspire Charter School, Huntington Park, California* (The Planning Center, 2009).

Source 9
Newport Place
4100 Newport Place Road
Newport Beach, CA 92660
Monday - Friday: 6:00 AM - 6:00 PM
Saturday: 8:00 AM - 12:00 PM

Chemical and Use Rate
Emergency Diesel Generator: 643 BHP, tested once per month on Friday at 7:00 AM for 20 minutes

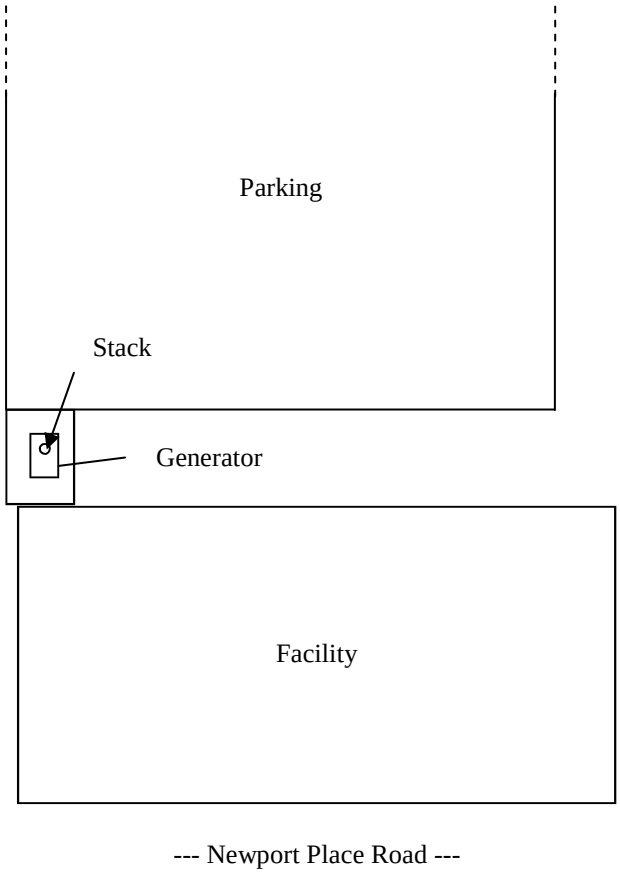

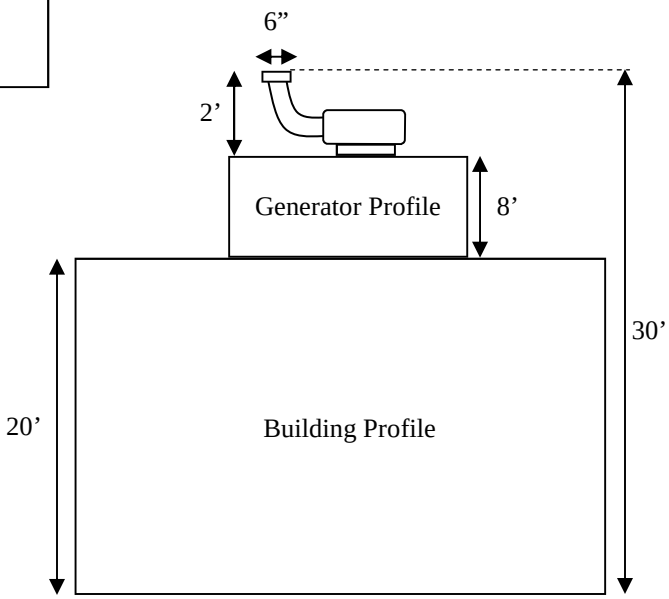

Appendix C.
Emission Rate Calculations

Source 1
Burger King
5180 Birch Street
Newport Beach, CA 92660

Operation: Charbroiler, chain-driven with catalyst

	hours	days	weeks
Temporal Profile:	17	5	52
	16	2	52

Average Pounds per Day:

Hamburger 154 lbs/day

Emission Factors:

ROG Emission Rate, Hamburger 0.32 lbs/1000 lbs meat

Emissions:

ROG Emissions, Hamburger 1.48 lbs/mo 2.95E-03 lbs/hr

(1) Average pounds per week and emission rates are based upon *Methods for Developing a National Emission Inventory for Commercial Cooking Processes* (E.H. Pechan and Associates, Inc. for USEPA, 2003).
(2) ROG = reactive organic gases; acetaldehyde used as surrogate for ROG in risk calculations.

Source 2
Conexant Systems Inc.
4000 MacArthur Boulevard
Newport Beach, CA 92660

Operation: Diesel Backup Generator

	hours	days	weeks
Temporal Profile:	24	5	52
	24	2	52
Generator Testing Profile:			
	0.5	1	12

Equipment Specifications:

Equipment Used (#)	1
Average Rated Horsepower	620
PM10 Emission Factor (g/bhp-hr) (1)	0.4
Load Factor (% / 100)	1

Emissions: 0.069 g/s

Emission rate scalar (intermittent use): (2) 0.0166

(1) SCAQMD Rule 1470 (2007).
(2) Emission rate scalar assumes that the emissions are reduced to represent monthly testing of generator.

Source 3
Mindspeed
4000 MacArthur Boulevard
Newport Beach, CA 92660

Operation: Diesel Backup Generator

	hours	days	weeks
Temporal Profile:	24	5	52
	24	2	52
Generator Testing Profile:			
	0.5	1	12

Equipment Specifications:

Equipment Used (#)	1
Average Rated Horsepower	620
PM10 Emission Factor (g/bhp-hr) (1)	0.4
Load Factor (% / 100)	1

Emissions: 0.069 g/s

Emission rate scalar (intermittent use): (2) 0.0166

(1) SCAQMD Rule 1470 (2007).
(2) Emission rate scalar assumes that the emissions are reduced to represent monthly testing of generator.

Note: Owner/Operator did not provide information. Information was obtained from SCAQMD permit. Testing information based on Conexant Systems Inc. facility interview for similar rated generator.

Source 4A
Jazz Semiconductor
4321 Jamboree Road
Newport Beach, CA 92660

Operation: Diesel Backup Generator

	hours	days	weeks
Temporal Profile:	24	5	52
	24	2	52
Generator Testing Profile:			
	0.1	1	12

2011 Air Emissions Report (SCAQMD) Diesel Particulate Matter emissions:

18.86	lbs/yr
1.572	lbs/mo
2.18E-03	lbs/hr
2.74E-04	g/s

Emission rate scalar (intermittent use): (1) 0.0033

(1) Emission rate scalar assumes that the emissions are reduced to represent monthly testing of generator.

Source 4B
Jazz Semiconductor
4321 Jamboree Road
Newport Beach, CA 92660

Operation: Natural Gas Combustion - Boiler

	hours	days	weeks
Temporal Profile:	24	5	52
	24	2	52

Equipment Rating:

			Energy Proportion
Steam Boilers	BTU/Hour	8.50E+06	0.35
	Number	4	
Hot Water Boilers	BTU/Hour	2.09E+07	0.65
	Number	3	

2011 Air Emissions Report (SCAQMD) reported emissions:

		lbs/yr	lbs/hr	Compound Wt Fraction
Composite:	1,3-Butadiene	0.122	1.69E-04	0.00003
	Acetaldehyde	1.209	1.67E-03	0.00030
	Acrolein	0.622	8.61E-04	0.00015
	Ammonia	4021	5.57E+00	0.99457
	Benzene	1.540	2.13E-03	0.00038
	Ethylbenzene	1.712	2.37E-03	0.00042
	Formaldehyde	4.018	5.56E-03	0.00099
	n-Hexane	1.150	1.59E-03	0.00028
	Naphthalene	0.078	1.08E-04	0.00002
	Toluene	6.621	9.17E-03	0.00164
	Xylenes	4.901	6.78E-03	0.00121
	Total	4043	5.60	1.00

Proportioned Emissions:

Steam Boilers	1.97	lbs/hr
Hot Water Boilers	3.63	lbs/hr

Source 4C
Jazz Semiconductor
4321 Jamboree Road
Newport Beach, CA 92660

Operation: Semiconductor Manufacturing, Trucking

	hours	days	weeks
Temporal Profile:	9	5	52
	0	0	0

Truck Activity:

Trucks/Day	16

Running Emissions[1]:

Miles Traveled/Trip (Ingress/Egress)	0.295
Emission Factor (g/mi)	0.144
Running Emissions (g/sec)	2.10E-05

Idling Emissions[2]:

Idling Duration (min)	5
Emission Factor (g/hr)	0.123
Idling Emissions (g/sec)	5.05E-06

Combined Emissions (g/sec)	2.61E-05
Lot Area (SF)	40,200
Lot Area (m2)	3,735
Adjusted Emissions (g/sec-m2)	6.98E-09

(1) Running PM10 emission factor for T7-tractor class obtained from CARB (EMFAC2011) for analysis year 2018.
Based upon a lot travel speed of 5 mph.
(2) Idling PM10 emission factor for T7 class obtained from CARB (EMFAC2011) for analysis year 2018.

Source 4D
Jazz Semiconductor
4321 Jamboree Road
Newport Beach, CA 92660

Operation: Soil Vapor Extraction (SVE) System

	hours	days	weeks
Temporal Profile:	24	5	52
	24	2	52

Equipment Rating:

					Conc.	Emissions	Weight
Extraction Blower		500.00	scfm	MW	(lb/ft3)	(lb/hr)	Fraction
SCAQMD Permit Limits[1]	Hexane	32.00	ppmv	86	7.15E-06	0.214	0.804
	Benzene	0.12	ppmv	78	2.43E-08	0.001	0.003
	Benzyl chloride	0.12	ppmv	127	3.96E-08	0.001	0.004
	Carbon tetrachloride	0.09	ppmv	154	3.60E-08	0.001	0.004
	Chloroform	0.7	ppmv	119	2.16E-07	0.006	0.024
	Ethylene dibromide	0.1	ppmv	188	4.88E-08	0.001	0.005
	Dichlorobenzene	0.11	ppmv	147	4.20E-08	0.001	0.005
	Dichloroethane	0.11	ppmv	99	2.83E-08	0.001	0.003
	Ethylbenzene	1.1	ppmv	106	3.03E-07	0.009	0.034
	Methylene chloride	0.09	ppmv	85	1.99E-08	0.001	0.002
	MTBE	0.5	ppmv	88	1.14E-07	0.003	0.013
	Tetrachloroethane	0.12	ppmv	168	5.24E-08	0.002	0.006
	Tetrachloroethylene	0.12	ppmv	166	5.17E-08	0.002	0.006
	Trichloroethane	0.12	ppmv	133	4.14E-08	0.001	0.005
	Trichloroethylene	1.5	ppmv	131	5.10E-07	0.015	0.057
	Vinyl chloride	1.3	ppmv	63	2.13E-07	0.006	0.024
						0.267	1.00

[1] From SCAQMD Permit to Operate G7639 - limits on effluent from vapor extraction system

Source 5A
Harbor Justice Center, Newport Beach Facility
4601 Jamboree Road
Newport Beach, CA 92660

Operation: Diesel Backup Generator

	hours	days	weeks
Temporal Profile:	12	5	52
	0	0	0
Generator Testing Profile:			
	0.5	1	12

Equipment Specifications:

Equipment Used (#)	1
Average Rated Horsepower	75
PM10 Emission Factor (g/bhp-hr) (1)	0.4
Load Factor (% / 100)	1

Emissions: 0.008 g/s

Emission rate scalar (intermittent use): (2) 0.0233

(1) SCAQMD Rule 1470 (2007).
(2) Emission rate scalar assumes that the emissions are reduced to represent monthly testing of generator.

Source 5B
Harbor Justice Center, Newport Beach Facility
4601 Jamboree Road
Newport Beach, CA 92660

Operation: Natural Gas Combustion - Boiler

	hours	days	weeks
Temporal Profile:	12	5	52
	0	0	0

Equipment Rating:

BTU/Hour	3.00E+06
Volumetric Flowrate (acfm)	1249

Emissions:		Emission Factor: (1) lb/mmscf	lb/mmacf (2)	Compound Emissions (lbs/hr)	Compound Wt Fraction
	Acetaldehyde	4.3E-03	2.3E-02	0.00169	0.0002
	Acrolein	2.7E-03	1.4E-02	0.00106	0.0001
	Ammonia	1.8E+01	9.4E+01	7.08078	0.9938
	Benzene	8.0E-03	4.2E-02	0.00315	0.0004
	Ethylbenzene	9.5E-03	5.0E-02	0.00374	0.0005
	Formaldehyde	1.7E-02	8.9E-02	0.00669	0.0009
	n-Hexane	6.3E-03	3.3E-02	0.00248	0.0003
	Naphthalene	3.0E-04	1.6E-03	0.00012	0.0000
	Toluene	3.7E-02	1.9E-01	0.01440	0.0020
	Xylene	2.7E-02	1.4E-01	0.01070	0.0015
	Total			7.125	1.00

(1) Default emission factors for natural gas fired external combustion equipment less than 10 MMBTU/hr from Supplemental Instructions: Reporting Procedures for AB2588 Facilities (Table B-1), SCAQMD 2010.
(2) SCFM to ACFM conversion assumes boiler temperature of 500F and 125 psig pressure based on manufacturers boiler specifications.

Source 6
Impac Funding
19500 Jamboree Road
Irvine, California 92612

Operation: Diesel Backup Generator

	hours	days	weeks
Temporal Profile:	12	5	52
	0	0	0
Generator Testing Profile:			
	0.25	1	52

Equipment Specifications:

Equipment Used (#)	1
Average Rated Horsepower	2220
PM10 Emission Factor (g/bhp-hr) (1)	0.4
Load Factor (% / 100)	1

Emissions: 0.247 g/s

Emission rate scalar (intermittent use): (2) 0.050

(1) SCAQMD Rule 1470 (2007).

(2) Emission rate scalar assumes that the emissions are reduced to represent weekly testing of generator.

Source 7
Kimera Restaurant/John Ghoukassian
19530 Jamboree Road
Irvine, California 92612

Operation: Charbroiling, under-fired

	hours	days	weeks
Temporal Profile:	10.5	4	52
	12.5	2	52

Average Pounds per Week:

Hamburger	270	lbs/wk
Chicken, Skinless	179	lbs/wk

Emission Factors:

ROG Emission Rate, Hamburger	3.94	lbs/1000 lbs meat
ROG Emission Rate, Chicken	1.82	lbs/1000 lbs meat

Emissions:

ROG Emissions, Hamburger	4.57	lbs/mo	1.59E-02	lbs/hr
ROG Emission Rate, Chicken	1.40	lbs/mo	4.86E-03	lbs/hr
Total			2.07E-02	lbs/hr

(1) Average pounds per week and emission rates are based upon *Methods for Developing a National Emission Inventory for Commercial Cooking Processes* (E.H. Pechan and Associates, Inc. for USEPA, 2003).
(2) ROG = reactive organic gases; acetaldehyde used as surrogate for ROG in risk calculations.

Source 8
The Pacific Club, Inc.
4110 MacArthur Boulevard
Newport Beach, CA 92660

Operation: Charbroiling, under-fired

	hours	days	weeks
Temporal Profile:	16	5	52
	16	1	52

Average Pounds per Week:

Hamburger	270	lbs/wk
Chicken, Skinless	179	lbs/wk

Emission Factors:

ROG Emission Rate, Hamburger	3.94	lbs/1000 lbs meat
ROG Emission Rate, Chicken	1.82	lbs/1000 lbs meat

Emissions:

ROG Emissions, Hamburger	4.57	lbs/mo	1.11E-02	lbs/hr
ROG Emission Rate, Chicken	1.40	lbs/mo	3.39E-03	lbs/hr
Total			1.45E-02	lbs/hr

(1) Average pounds per week and emission rates are based upon *Methods for Developing a National Emission Inventory for Commercial Cooking Processes* (E.H. Pechan and Associates, Inc. for USEPA, 2003).
(2) ROG = reactive organic gases; acetaldehyde used as surrogate for ROG in risk calculations.

Source 9
Newport Place/Advent Realty L.P. FUND II
4100 Newport Place Rd.
Newport Beach, CA 92660

Operation: Diesel Backup Generator

	hours	days	weeks
Temporal Profile:	12	5	52
	0	0	0
Generator Testing Profile:			
	0.33	1	12

Equipment Specifications:

Equipment Used (#)	1
Average Rated Horsepower	643
PM10 Emission Factor (g/bhp-hr) (1)	0.4
Load Factor (% / 100)	1

Emissions: 0.071 g/s

Emission rate scalar (intermittent use): (2) 0.0155

(1) SCAQMD Rule 1470 (2007).
(2) Emission rate scalar assumes that the emissions are reduced to represent monthly testing of generator.

Appendix D.
ISCST3 Model Output Files

```
 *** ISCST3 - VERSION 02035 ***    ***  Uptown Newport HRA                                          ***        03/21/12
                                   ***                                                              ***        10:18:36
**MODELOPTs:                                                                                                   PAGE   1
CONC                    URBAN FLAT                       NOSTD         NOCALM

                                          ***     MODEL SETUP OPTIONS SUMMARY       ***
- - - - - - - - - - - - - - - - - - - - - - - - - - - - - - - - - - - - - - - - - - - - - - - - - - - - - - - - - - - - - - - - -

**Intermediate Terrain Processing is Selected

**Model Is Setup For Calculation of Average CONCentration Values.

  --  SCAVENGING/DEPOSITION LOGIC --
**Model Uses NO DRY DEPLETION.  DDPLETE =  F
**Model Uses NO WET DEPLETION.  WDPLETE =  F
**NO WET SCAVENGING Data Provided.
**NO GAS DRY DEPOSITION Data Provided.
**Model Does NOT Use GRIDDED TERRAIN Data for Depletion Calculations

**Model Uses URBAN Dispersion.

**Model Uses User-Specified Options:
           1. Final Plume Rise.
           2. Not Use Stack-tip Downwash.
           3. Buoyancy-induced Dispersion.
           4. Not Use Calms Processing Routine.
           5. Not Use Missing Data Processing Routine.
           6. Default Wind Profile Exponents.
           7. Default Vertical Potential Temperature Gradients.

**Model Assumes Receptors on FLAT Terrain.

**Model Assumes No FLAGPOLE Receptor Heights.

**Model Calculates ANNUAL Averages Only

**This Run Includes:    14 Source(s);     14 Source Group(s); and     611 Receptor(s)

**The Model Assumes A Pollutant Type of:  OTHER

**Model Set To Continue RUNning After the Setup Testing.

**Output Options Selected:
         Model Outputs Tables of ANNUAL Averages by Receptor
         Model Outputs External File(s) of High Values for Plotting (PLOTFILE Keyword)

**Misc. Inputs:  Anem. Hgt. (m) =    10.00 ;    Decay Coef. =    0.000     ;    Rot. Angle =     0.0
                 Emission Units = GRAMS/SEC                                 ;  Emission Rate Unit Factor =   0.10000E+07
                 Output Units   = MICROGRAMS/M**3

**Approximate Storage Requirements of Model =     1.3 MB of RAM.

**Input Runstream File:          ISCST3.INP
**Output Print File:             ISCST3.OUT
```

```
 *** ISCST3 - VERSION 02035 ***    ***  Uptown Newport HRA                                          ***        03/21/12
                                   ***                                                              ***        10:18:36
**MODELOPTs:                                                                                                   PAGE   2
CONC                    URBAN FLAT                       NOSTD         NOCALM
```

*** POINT SOURCE DATA ***

SOURCE ID	NUMBER PART. CATS.	EMISSION RATE (GRAMS/SEC)	X (METERS)	Y (METERS)	BASE ELEV. (METERS)	STACK HEIGHT (METERS)	STACK TEMP. (DEG.K)	STACK EXIT VEL. (M/SEC)	STACK DIAMETER (METERS)	BUILDING EXISTS	EMISSION RATE SCALAR VARY BY
1	0	0.37169E-03	420578.5	3725274.5	0.0	4.57	330.00	0.01	7.98	NO	HROFDY
5A	0	0.80000E-02	420663.9	3725348.0	0.0	4.27	622.00	0.01	5.56	NO	HROFDY
5B	0	0.89773E+00	420644.3	3725341.5	0.0	7.62	533.00	0.01	8.66	NO	HROFDY
6	0	0.24700E+00	420321.0	3724675.2	0.0	4.72	622.00	0.01	26.18	NO	HROFDY
7	0	0.26082E-02	420266.8	3724744.8	0.0	4.57	330.00	0.01	10.19	NO	HROFDY
8	0	0.18270E-02	420042.8	3725259.0	0.0	7.62	330.00	0.01	9.72	NO	HROFDY
9	0	0.71000E-01	419767.0	3725109.2	0.0	8.69	622.00	0.01	13.61	NO	HROFDY
2	0	0.69000E-01	420106.9	3724837.2	0.0	32.61	622.00	0.01	13.61	NO	HROFDY
3	0	0.69000E-01	420123.2	3724787.8	0.0	32.61	622.00	0.01	13.61	NO	HROFDY
4D	0	0.33641E-01	420126.4	3725020.0	0.0	7.01	335.93	3.37	0.31	NO	HROFDY
4BWATER	0	0.45737E+00	420135.7	3725033.0	0.0	6.01	533.00	0.01	22.88	NO	HROFDY
4A	0	0.27400E-03	420220.2	3725138.0	0.0	7.60	622.00	0.01	22.23	NO	HROFDY
4BSTEAM	0	0.24822E+00	420226.8	3725153.8	0.0	7.24	533.00	0.01	14.58	NO	HROFDY

```
 *** ISCST3 - VERSION 02035 ***    ***  Uptown Newport HRA                                          ***        03/21/12
                                   ***                                                              ***        10:18:36
**MODELOPTs:                                                                                                   PAGE   3
CONC                   URBAN FLAT                       NOSTD         NOCALM



                                              *** AREAPOLY SOURCE DATA ***

             NUMBER EMISSION RATE   LOCATION OF AREA  BASE     RELEASE  NUMBER      INIT.   EMISSION RATE
   SOURCE     PART.  (GRAMS/SEC       X        Y      ELEV.    HEIGHT  OF VERTS.     SZ      SCALAR VARY
     ID       CATS.   /METER**2)   (METERS) (METERS) (METERS) (METERS)            (METERS)       BY
- - - - - - - - - - - - - - - - - - - - - - - - - - - - - - - - - - - - - - - - - - - - - - - - - - - - - - - - - - - - - -

  4C            0   0.69800E-08  420333.6 3725200.2     0.0     4.15       6         1.93      HROFDY
```

```
 *** ISCST3 - VERSION 02035 ***    ***  Uptown Newport HRA                                          ***        03/21/12
                                   ***                                                              ***        10:18:36
**MODELOPTs:                                                                                                   PAGE  15
CONC                    URBAN FLAT                       NOSTD         NOCALM
```

*** METEOROLOGICAL DAYS SELECTED FOR PROCESSING ***
(1=YES; 0=NO)

```
1 1 1 1 1 1 1 1 1 1   1 1 1 1 1 1 1 1 1 1   1 1 1 1 1 1 1 1 1 1   1 1 1 1 1 1 1 1 1 1   1 1 1 1 1 1 1 1 1 1
1 1 1 1 1 1 1 1 1 1   1 1 1 1 1 1 1 1 1 1   1 1 1 1 1 1 1 1 1 1   1 1 1 1 1 1 1 1 1 1   1 1 1 1 1 1 1 1 1 1
1 1 1 1 1 1 1 1 1 1   1 1 1 1 1 1 1 1 1 1   1 1 1 1 1 1 1 1 1 1   1 1 1 1 1 1 1 1 1 1   1 1 1 1 1 1 1 1 1 1
1 1 1 1 1 1 1 1 1 1   1 1 1 1 1 1 1 1 1 1   1 1 1 1 1 1 1 1 1 1   1 1 1 1 1 1 1 1 1 1   1 1 1 1 1 1 1 1 1 1
1 1 1 1 1 1 1 1 1 1   1 1 1 1 1 1 1 1 1 1   1 1 1 1 1 1 1 1 1 1   1 1 1 1 1 1 1 1 1 1   1 1 1 1 1 1 1 1 1 1
1 1 1 1 1 1 1 1 1 1   1 1 1 1 1 1 1 1 1 1   1 1 1 1 1 1 1 1 1 1   1 1 1 1 1 1 1 1 1 1   1 1 1 1 1 1 1 1 1 1
1 1 1 1 1 1 1 1 1 1   1 1 1 1 1 1 1 1 1 1   1 1 1 1 1 1 1 1 1 1   1 1 1 1 1 1 1 1 1 1   1 1 1 1 1 1 1 1 1 1
1 1 1 1 1 1 1 1 1 1   1 1 1 1 1 1
```

NOTE: METEOROLOGICAL DATA ACTUALLY PROCESSED WILL ALSO DEPEND ON WHAT IS INCLUDED IN THE DATA FILE.

*** UPPER BOUND OF FIRST THROUGH FIFTH WIND SPEED CATEGORIES ***
(METERS/SEC)

1.54, 3.09, 5.14, 8.23, 10.80,

*** WIND PROFILE EXPONENTS ***

STABILITY CATEGORY	WIND SPEED CATEGORY 1	2	3	4	5	6
A	.15000E+00	.15000E+00	.15000E+00	.15000E+00	.15000E+00	.15000E+00
B	.15000E+00	.15000E+00	.15000E+00	.15000E+00	.15000E+00	.15000E+00
C	.20000E+00	.20000E+00	.20000E+00	.20000E+00	.20000E+00	.20000E+00
D	.25000E+00	.25000E+00	.25000E+00	.25000E+00	.25000E+00	.25000E+00
E	.30000E+00	.30000E+00	.30000E+00	.30000E+00	.30000E+00	.30000E+00
F	.30000E+00	.30000E+00	.30000E+00	.30000E+00	.30000E+00	.30000E+00

*** VERTICAL POTENTIAL TEMPERATURE GRADIENTS ***
(DEGREES KELVIN PER METER)

STABILITY CATEGORY	WIND SPEED CATEGORY 1	2	3	4	5	6
A	.00000E+00	.00000E+00	.00000E+00	.00000E+00	.00000E+00	.00000E+00
B	.00000E+00	.00000E+00	.00000E+00	.00000E+00	.00000E+00	.00000E+00
C	.00000E+00	.00000E+00	.00000E+00	.00000E+00	.00000E+00	.00000E+00
D	.00000E+00	.00000E+00	.00000E+00	.00000E+00	.00000E+00	.00000E+00
E	.20000E-01	.20000E-01	.20000E-01	.20000E-01	.20000E-01	.20000E-01
F	.35000E-01	.35000E-01	.35000E-01	.35000E-01	.35000E-01	.35000E-01

```
 *** ISCST3 - VERSION 02035 ***    ***  Uptown Newport HRA                                                  ***        03/21/12
                                   ***                                                                      ***        10:18:36
**MODELOPTs:                                                                                                           PAGE  16
CONC                    URBAN FLAT                      NOSTD         NOCALM


                     *** THE FIRST  24 HOURS OF METEOROLOGICAL DATA ***

     FILE:   C:\Users\sbush\DOCUME~1\!METFI~1\SCAQMD~1\METDAT~2\COSMESA.ASC
     FORMAT: (4I2,2F9.4,F6.1,I2,2F7.1,f9.4,f10.1,f8.4,i4,f7.2)
     SURFACE STATION NO.:  53126                  UPPER AIR STATION NO.:  91919
                    NAME: UNKNOWN                                  NAME: UNKNOWN
                    YEAR:   1981                                   YEAR:   1981

             FLOW   SPEED  TEMP  STAB  MIXING HEIGHT (M)  USTAR  M-O LENGTH   Z-0 IPCODE PRATE
YR MN DY HR VECTOR  (M/S)   (K)  CLASS   RURAL   URBAN    (M/S)     (M)       (M)       (mm/HR)
- - - - - - - - - - - - - - - - - - - - - - - - - - - - - - - - - - - - - - - - - - - - - - - - - - - - - - - - - - - - - - - - - - -

81 01 01 01  247.3   1.00  282.6   7     387.2   152.0    0.0000       0.0  0.0000   0   0.00
81 01 01 02  304.9   1.00  282.6   7     397.3   152.0    0.0000       0.0  0.0000   0   0.00
81 01 01 03  355.0   1.34  283.1   7     407.3   152.0    0.0000       0.0  0.0000   0   0.00
81 01 01 04   98.5   1.00  283.7   7     417.4   152.0    0.0000       0.0  0.0000   0   0.00
81 01 01 05  219.0   1.00  281.5   7     427.5   152.0    0.0000       0.0  0.0000   0   0.00
81 01 01 06  274.5   1.00  281.5   7     437.5   152.0    0.0000       0.0  0.0000   0   0.00
81 01 01 07  274.5   0.00  280.4   7     447.6   152.0    0.0000       0.0  0.0000   0   0.00
81 01 01 08  157.1   1.00  282.0   6      71.6   202.6    0.0000       0.0  0.0000   0   0.00
81 01 01 09  186.5   1.00  286.5   5     146.0   255.1    0.0000       0.0  0.0000   0   0.00
81 01 01 10  211.6   1.00  290.4   4     220.4   307.7    0.0000       0.0  0.0000   0   0.00
81 01 01 11   44.1   1.34  294.3   3     294.8   360.3    0.0000       0.0  0.0000   0   0.00
81 01 01 12   35.6   2.24  295.4   3     369.2   412.9    0.0000       0.0  0.0000   0   0.00
81 01 01 13   42.2   1.79  297.6   3     443.6   465.4    0.0000       0.0  0.0000   0   0.00
81 01 01 14   56.7   1.34  295.9   2     518.0   518.0    0.0000       0.0  0.0000   0   0.00
81 01 01 15   67.3   2.24  294.8   3     518.0   518.0    0.0000       0.0  0.0000   0   0.00
81 01 01 16   75.7   1.79  293.1   4     518.0   518.0    0.0000       0.0  0.0000   0   0.00
81 01 01 17   65.1   1.34  290.4   5     518.0   510.6    0.0000       0.0  0.0000   0   0.00
81 01 01 18   97.6   1.00  288.1   6     518.0   468.1    0.0000       0.0  0.0000   0   0.00
81 01 01 19  110.5   1.00  287.6   7     518.0   425.6    0.0000       0.0  0.0000   0   0.00
81 01 01 20  100.7   1.00  287.0   7     518.0   383.1    0.0000       0.0  0.0000   0   0.00
81 01 01 21  133.6   1.00  285.9   7     518.0   340.6    0.0000       0.0  0.0000   0   0.00
81 01 01 22   92.0   1.00  285.9   7     518.0   298.0    0.0000       0.0  0.0000   0   0.00
81 01 01 23    0.7   1.00  285.4   7     518.0   255.5    0.0000       0.0  0.0000   0   0.00
81 01 01 24  269.7   1.00  284.8   7     518.0   213.0    0.0000       0.0  0.0000   0   0.00


*** NOTES:  STABILITY CLASS 1=A, 2=B, 3=C, 4=D, 5=E AND 6=F.
            FLOW VECTOR IS DIRECTION TOWARD WHICH WIND IS BLOWING.
```

```
 *** ISCST3 - VERSION 02035 ***    ***  Uptown Newport HRA                                        ***        03/21/12
                                   ***                                                            ***        10:18:36
**MODELOPTs:                                                                                                 PAGE 129
CONC                   URBAN FLAT                      NOSTD         NOCALM

                                           *** THE SUMMARY OF MAXIMUM ANNUAL (   1 YRS) RESULTS ***


                                       ** CONC OF OTHER    IN MICROGRAMS/M**3                          **

                                                                                                     NETWORK
GROUP ID                      AVERAGE CONC                RECEPTOR  (XR, YR, ZELEV, ZFLAG)   OF TYPE  GRID-ID
- - - - - - - - - - - - - - - - - - - - - - - - - - - - - - - - - - - - - - - - - - - - - - - - - - - - - - - - - - - -


1         1ST HIGHEST VALUE IS       0.00167 AT (  420428.09,  3725127.50,      0.00,      0.00)  DC      NA
          2ND HIGHEST VALUE IS       0.00165 AT (  420435.91,  3725121.00,      0.00,      0.00)  DC      NA
          3RD HIGHEST VALUE IS       0.00165 AT (  420420.41,  3725133.75,      0.00,      0.00)  DC      NA
          4TH HIGHEST VALUE IS       0.00161 AT (  420427.09,  3725120.00,      0.00,      0.00)  DC      NA
          5TH HIGHEST VALUE IS       0.00160 AT (  420417.09,  3725130.00,      0.00,      0.00)  DC      NA
          6TH HIGHEST VALUE IS       0.00160 AT (  420412.59,  3725140.00,      0.00,      0.00)  DC      NA
          7TH HIGHEST VALUE IS       0.00158 AT (  420443.59,  3725114.75,      0.00,      0.00)  DC      NA
          8TH HIGHEST VALUE IS       0.00157 AT (  420408.81,  3725143.25,      0.00,      0.00)  DC      NA
          9TH HIGHEST VALUE IS       0.00155 AT (  420417.09,  3725120.00,      0.00,      0.00)  DC      NA
         10TH HIGHEST VALUE IS       0.00153 AT (  420405.69,  3725139.25,      0.00,      0.00)  DC      NA

2         1ST HIGHEST VALUE IS       0.00004 AT (  420260.59,  3725065.50,      0.00,      0.00)  DC      NA
          2ND HIGHEST VALUE IS       0.00004 AT (  420268.19,  3725059.00,      0.00,      0.00)  DC      NA
          3RD HIGHEST VALUE IS       0.00004 AT (  420252.91,  3725072.00,      0.00,      0.00)  DC      NA
          4TH HIGHEST VALUE IS       0.00004 AT (  420257.09,  3725060.00,      0.00,      0.00)  DC      NA
          5TH HIGHEST VALUE IS       0.00004 AT (  420247.09,  3725070.00,      0.00,      0.00)  DC      NA
          6TH HIGHEST VALUE IS       0.00004 AT (  420257.09,  3725050.00,      0.00,      0.00)  DC      NA
          7TH HIGHEST VALUE IS       0.00004 AT (  420247.09,  3725060.00,      0.00,      0.00)  DC      NA
          8TH HIGHEST VALUE IS       0.00004 AT (  420267.09,  3725050.00,      0.00,      0.00)  DC      NA
          9TH HIGHEST VALUE IS       0.00004 AT (  420275.91,  3725052.75,      0.00,      0.00)  DC      NA
         10TH HIGHEST VALUE IS       0.00004 AT (  420245.31,  3725078.50,      0.00,      0.00)  DC      NA

3         1ST HIGHEST VALUE IS       0.00004 AT (  420304.69,  3725048.50,      0.00,      0.00)  DC      NA
          2ND HIGHEST VALUE IS       0.00004 AT (  420311.09,  3725056.00,      0.00,      0.00)  DC      NA
          3RD HIGHEST VALUE IS       0.00004 AT (  420298.19,  3725040.75,      0.00,      0.00)  DC      NA
          4TH HIGHEST VALUE IS       0.00004 AT (  420294.81,  3725036.75,      0.00,      0.00)  DC      NA
          5TH HIGHEST VALUE IS       0.00004 AT (  420291.19,  3725039.75,      0.00,      0.00)  DC      NA
          6TH HIGHEST VALUE IS       0.00004 AT (  420317.59,  3725063.75,      0.00,      0.00)  DC      NA
          7TH HIGHEST VALUE IS       0.00004 AT (  420307.09,  3725040.00,      0.00,      0.00)  DC      NA
          8TH HIGHEST VALUE IS       0.00004 AT (  420324.09,  3725071.25,      0.00,      0.00)  DC      NA
          9TH HIGHEST VALUE IS       0.00004 AT (  420287.09,  3725030.00,      0.00,      0.00)  DC      NA
         10TH HIGHEST VALUE IS       0.00004 AT (  420297.09,  3725030.00,      0.00,      0.00)  DC      NA
```

```
 *** ISCST3 - VERSION 02035 ***    ***  Uptown Newport HRA                                            ***        03/21/12
                                   ***                                                                ***        10:18:36
**MODELOPTs:                                                                                                     PAGE 130
CONC                    URBAN FLAT                      NOSTD         NOCALM

                                          *** THE SUMMARY OF MAXIMUM ANNUAL (   1 YRS) RESULTS ***


                                       ** CONC OF OTHER    IN MICROGRAMS/M**3                          **

                                                                                                          NETWORK
GROUP ID                      AVERAGE CONC               RECEPTOR  (XR, YR, ZELEV, ZFLAG)   OF TYPE  GRID-ID
- - - - - - - - - - - - - - - - - - - - - - - - - - - - - - - - - - - - - - - - - - - - - - - - - - - - - - - - - - - - -

4A        1ST HIGHEST VALUE IS       0.00000 AT (  420072.41,  3724964.00,      0.00,      0.00)  DC      NA
          2ND HIGHEST VALUE IS       0.00000 AT (  420076.19,  3724968.50,      0.00,      0.00)  DC      NA
          3RD HIGHEST VALUE IS       0.00000 AT (  420075.50,  3724961.50,      0.00,      0.00)  DC      NA
          4TH HIGHEST VALUE IS       0.00000 AT (  420082.50,  3724976.25,      0.00,      0.00)  DC      NA
          5TH HIGHEST VALUE IS       0.00000 AT (  420083.31,  3724955.25,      0.00,      0.00)  DC      NA
          6TH HIGHEST VALUE IS       0.00000 AT (  420087.09,  3724970.00,      0.00,      0.00)  DC      NA
          7TH HIGHEST VALUE IS       0.00000 AT (  420088.91,  3724984.00,      0.00,      0.00)  DC      NA
          8TH HIGHEST VALUE IS       0.00000 AT (  420237.09,  3724857.75,      0.00,      0.00)  DC      NA
          9TH HIGHEST VALUE IS       0.00000 AT (  420229.31,  3724864.00,      0.00,      0.00)  DC      NA
         10TH HIGHEST VALUE IS       0.00000 AT (  420087.09,  3724960.00,      0.00,      0.00)  DC      NA

4BSTEAM   1ST HIGHEST VALUE IS       1.72796 AT (  420408.81,  3725143.25,      0.00,      0.00)  DC      NA
          2ND HIGHEST VALUE IS       1.66785 AT (  420412.59,  3725140.00,      0.00,      0.00)  DC      NA
          3RD HIGHEST VALUE IS       1.64617 AT (  420405.69,  3725139.25,      0.00,      0.00)  DC      NA
          4TH HIGHEST VALUE IS       1.55662 AT (  420420.41,  3725133.75,      0.00,      0.00)  DC      NA
          5TH HIGHEST VALUE IS       1.47311 AT (  420417.09,  3725130.00,      0.00,      0.00)  DC      NA
          6TH HIGHEST VALUE IS       1.46006 AT (  420399.59,  3725131.50,      0.00,      0.00)  DC      NA
          7TH HIGHEST VALUE IS       1.44846 AT (  420428.09,  3725127.50,      0.00,      0.00)  DC      NA
          8TH HIGHEST VALUE IS       1.44663 AT (  420407.09,  3725130.00,      0.00,      0.00)  DC      NA
          9TH HIGHEST VALUE IS       1.33774 AT (  420435.91,  3725121.00,      0.00,      0.00)  DC      NA
         10TH HIGHEST VALUE IS       1.28846 AT (  420427.09,  3725120.00,      0.00,      0.00)  DC      NA

4BWATER   1ST HIGHEST VALUE IS       3.41068 AT (  420229.91,  3725091.25,      0.00,      0.00)  DC      NA
          2ND HIGHEST VALUE IS       3.37986 AT (  420222.31,  3725097.75,      0.00,      0.00)  DC      NA
          3RD HIGHEST VALUE IS       3.34174 AT (  420237.59,  3725085.00,      0.00,      0.00)  DC      NA
          4TH HIGHEST VALUE IS       3.32233 AT (  420218.19,  3725101.25,      0.00,      0.00)  DC      NA
          5TH HIGHEST VALUE IS       3.27075 AT (  420215.50,  3725097.50,      0.00,      0.00)  DC      NA
          6TH HIGHEST VALUE IS       3.24788 AT (  420217.09,  3725090.00,      0.00,      0.00)  DC      NA
          7TH HIGHEST VALUE IS       3.19336 AT (  420227.09,  3725080.00,      0.00,      0.00)  DC      NA
          8TH HIGHEST VALUE IS       3.17406 AT (  420245.31,  3725078.50,      0.00,      0.00)  DC      NA
          9TH HIGHEST VALUE IS       3.07711 AT (  420209.59,  3725089.25,      0.00,      0.00)  DC      NA
         10TH HIGHEST VALUE IS       3.06803 AT (  420217.09,  3725080.00,      0.00,      0.00)  DC      NA
```

```
 *** ISCST3 - VERSION 02035 ***    ***  Uptown Newport HRA                                                  ***        03/21/12
                                   ***                                                                      ***        10:18:36
**MODELOPTs:                                                                                                           PAGE 131
CONC                   URBAN FLAT                     NOSTD         NOCALM

                                          *** THE SUMMARY OF MAXIMUM ANNUAL (   1 YRS) RESULTS ***


                                      ** CONC OF OTHER    IN MICROGRAMS/M**3                          **

                                                                                                         NETWORK
GROUP ID                      AVERAGE CONC               RECEPTOR  (XR, YR, ZELEV, ZFLAG)   OF TYPE  GRID-ID
- - - - - - - - - - - - - - - - - - - - - - - - - - - - - - - - - - - - - - - - - - - - - - - - - - - - - - - - - - - -

4C        1ST HIGHEST VALUE IS       0.00013 AT (  420408.81,  3725143.25,      0.00,      0.00)  DC      NA
          2ND HIGHEST VALUE IS       0.00012 AT (  420405.69,  3725139.25,      0.00,      0.00)  DC      NA
          3RD HIGHEST VALUE IS       0.00011 AT (  420412.59,  3725140.00,      0.00,      0.00)  DC      NA
          4TH HIGHEST VALUE IS       0.00011 AT (  420365.41,  3725113.25,      0.00,      0.00)  DC      NA
          5TH HIGHEST VALUE IS       0.00011 AT (  420357.41,  3725110.50,      0.00,      0.00)  DC      NA
          6TH HIGHEST VALUE IS       0.00011 AT (  420374.91,  3725116.50,      0.00,      0.00)  DC      NA
          7TH HIGHEST VALUE IS       0.00011 AT (  420399.59,  3725131.50,      0.00,      0.00)  DC      NA
          8TH HIGHEST VALUE IS       0.00011 AT (  420356.41,  3725109.50,      0.00,      0.00)  DC      NA
          9TH HIGHEST VALUE IS       0.00010 AT (  420367.09,  3725110.00,      0.00,      0.00)  DC      NA
         10TH HIGHEST VALUE IS       0.00010 AT (  420384.41,  3725119.75,      0.00,      0.00)  DC      NA

4D        1ST HIGHEST VALUE IS       5.42387 AT (  420153.19,  3725040.00,      0.00,      0.00)  DC      NA
          2ND HIGHEST VALUE IS       4.80069 AT (  420159.59,  3725047.75,      0.00,      0.00)  DC      NA
          3RD HIGHEST VALUE IS       4.65399 AT (  420146.91,  3725032.50,      0.00,      0.00)  DC      NA
          4TH HIGHEST VALUE IS       4.51245 AT (  420157.09,  3725030.00,      0.00,      0.00)  DC      NA
          5TH HIGHEST VALUE IS       4.50924 AT (  420167.09,  3725040.00,      0.00,      0.00)  DC      NA
          6TH HIGHEST VALUE IS       4.24571 AT (  420167.09,  3725050.00,      0.00,      0.00)  DC      NA
          7TH HIGHEST VALUE IS       3.97507 AT (  420167.09,  3725030.00,      0.00,      0.00)  DC      NA
          8TH HIGHEST VALUE IS       3.94346 AT (  420166.00,  3725055.50,      0.00,      0.00)  DC      NA
          9TH HIGHEST VALUE IS       3.63848 AT (  420177.09,  3725040.00,      0.00,      0.00)  DC      NA
         10TH HIGHEST VALUE IS       3.57268 AT (  420177.09,  3725050.00,      0.00,      0.00)  DC      NA

5A        1ST HIGHEST VALUE IS       0.00008 AT (  420428.09,  3725127.50,      0.00,      0.00)  DC      NA
          2ND HIGHEST VALUE IS       0.00008 AT (  420435.91,  3725121.00,      0.00,      0.00)  DC      NA
          3RD HIGHEST VALUE IS       0.00008 AT (  420420.41,  3725133.75,      0.00,      0.00)  DC      NA
          4TH HIGHEST VALUE IS       0.00008 AT (  420443.59,  3725114.75,      0.00,      0.00)  DC      NA
          5TH HIGHEST VALUE IS       0.00008 AT (  420427.09,  3725120.00,      0.00,      0.00)  DC      NA
          6TH HIGHEST VALUE IS       0.00008 AT (  420412.59,  3725140.00,      0.00,      0.00)  DC      NA
          7TH HIGHEST VALUE IS       0.00008 AT (  420417.09,  3725130.00,      0.00,      0.00)  DC      NA
          8TH HIGHEST VALUE IS       0.00008 AT (  420451.31,  3725108.50,      0.00,      0.00)  DC      NA
          9TH HIGHEST VALUE IS       0.00008 AT (  420408.81,  3725143.25,      0.00,      0.00)  DC      NA
         10TH HIGHEST VALUE IS       0.00008 AT (  420437.09,  3725110.00,      0.00,      0.00)  DC      NA
```

```
 *** ISCST3 - VERSION 02035 ***    ***  Uptown Newport HRA                                            ***        03/21/12
                                   ***                                                                ***        10:18:36
**MODELOPTs:                                                                                                     PAGE 132
CONC                   URBAN FLAT                        NOSTD         NOCALM

                                              *** THE SUMMARY OF MAXIMUM ANNUAL (   1 YRS) RESULTS ***


                                          ** CONC OF OTHER    IN MICROGRAMS/M**3                         **

                                                                                                     NETWORK
GROUP ID                      AVERAGE CONC               RECEPTOR  (XR, YR, ZELEV, ZFLAG)   OF TYPE  GRID-ID
- - - - - - - - - - - - - - - - - - - - - - - - - - - - - - - - - - - - - - - - - - - - - - - - - - - - - - - - - - - - -

5B        1ST HIGHEST VALUE IS       0.86975 AT (  420443.59,  3725114.75,      0.00,      0.00)  DC      NA
          2ND HIGHEST VALUE IS       0.86929 AT (  420435.91,  3725121.00,      0.00,      0.00)  DC      NA
          3RD HIGHEST VALUE IS       0.86336 AT (  420451.31,  3725108.50,      0.00,      0.00)  DC      NA
          4TH HIGHEST VALUE IS       0.86269 AT (  420428.09,  3725127.50,      0.00,      0.00)  DC      NA
          5TH HIGHEST VALUE IS       0.84974 AT (  420420.41,  3725133.75,      0.00,      0.00)  DC      NA
          6TH HIGHEST VALUE IS       0.84826 AT (  420459.09,  3725102.00,      0.00,      0.00)  DC      NA
          7TH HIGHEST VALUE IS       0.83924 AT (  420427.09,  3725120.00,      0.00,      0.00)  DC      NA
          8TH HIGHEST VALUE IS       0.83722 AT (  420437.09,  3725110.00,      0.00,      0.00)  DC      NA
          9TH HIGHEST VALUE IS       0.83082 AT (  420412.59,  3725140.00,      0.00,      0.00)  DC      NA
         10TH HIGHEST VALUE IS       0.82954 AT (  420417.09,  3725130.00,      0.00,      0.00)  DC      NA

6         1ST HIGHEST VALUE IS       0.00058 AT (  420075.50,  3724961.50,      0.00,      0.00)  DC      NA
          2ND HIGHEST VALUE IS       0.00058 AT (  420072.41,  3724964.00,      0.00,      0.00)  DC      NA
          3RD HIGHEST VALUE IS       0.00058 AT (  420083.31,  3724955.25,      0.00,      0.00)  DC      NA
          4TH HIGHEST VALUE IS       0.00058 AT (  420076.19,  3724968.50,      0.00,      0.00)  DC      NA
          5TH HIGHEST VALUE IS       0.00058 AT (  420091.09,  3724949.00,      0.00,      0.00)  DC      NA
          6TH HIGHEST VALUE IS       0.00058 AT (  420087.09,  3724960.00,      0.00,      0.00)  DC      NA
          7TH HIGHEST VALUE IS       0.00058 AT (  420099.00,  3724942.75,      0.00,      0.00)  DC      NA
          8TH HIGHEST VALUE IS       0.00058 AT (  420097.09,  3724950.00,      0.00,      0.00)  DC      NA
          9TH HIGHEST VALUE IS       0.00058 AT (  420087.09,  3724970.00,      0.00,      0.00)  DC      NA
         10TH HIGHEST VALUE IS       0.00058 AT (  420082.50,  3724976.25,      0.00,      0.00)  DC      NA

7         1ST HIGHEST VALUE IS       0.02377 AT (  420277.50,  3724874.50,      0.00,      0.00)  DC      NA
          2ND HIGHEST VALUE IS       0.02373 AT (  420283.91,  3724882.00,      0.00,      0.00)  DC      NA
          3RD HIGHEST VALUE IS       0.02368 AT (  420271.00,  3724866.75,      0.00,      0.00)  DC      NA
          4TH HIGHEST VALUE IS       0.02350 AT (  420290.41,  3724889.75,      0.00,      0.00)  DC      NA
          5TH HIGHEST VALUE IS       0.02347 AT (  420264.50,  3724859.00,      0.00,      0.00)  DC      NA
          6TH HIGHEST VALUE IS       0.02315 AT (  420296.91,  3724897.25,      0.00,      0.00)  DC      NA
          7TH HIGHEST VALUE IS       0.02307 AT (  420258.09,  3724851.50,      0.00,      0.00)  DC      NA
          8TH HIGHEST VALUE IS       0.02301 AT (  420287.09,  3724890.00,      0.00,      0.00)  DC      NA
          9TH HIGHEST VALUE IS       0.02289 AT (  420277.09,  3724880.00,      0.00,      0.00)  DC      NA
         10TH HIGHEST VALUE IS       0.02267 AT (  420303.31,  3724905.00,      0.00,      0.00)  DC      NA
```

```
 *** ISCST3 - VERSION 02035 ***    ***  Uptown Newport HRA                                           ***        03/21/12
                                   ***                                                                ***        10:18:36
**MODELOPTs:                                                                                                     PAGE 133
CONC                   URBAN FLAT                      NOSTD         NOCALM

                                                   *** THE SUMMARY OF MAXIMUM ANNUAL (   1 YRS) RESULTS ***


                                       ** CONC OF OTHER    IN MICROGRAMS/M**3                          **

                                                                                                           NETWORK
GROUP ID                      AVERAGE CONC                RECEPTOR  (XR, YR, ZELEV, ZFLAG)   OF TYPE  GRID-ID
- - - - - - - - - - - - - - - - - - - - - - - - - - - - - - - - - - - - - - - - - - - - - - - - - - - - - - - - - - - - -


8         1ST HIGHEST VALUE IS       0.00452 AT (  420209.59,  3725089.25,      0.00,      0.00)  DC      NA
          2ND HIGHEST VALUE IS       0.00450 AT (  420203.81,  3725081.25,      0.00,      0.00)  DC      NA
          3RD HIGHEST VALUE IS       0.00447 AT (  420195.50,  3725078.00,      0.00,      0.00)  DC      NA
          4TH HIGHEST VALUE IS       0.00446 AT (  420201.41,  3725078.00,      0.00,      0.00)  DC      NA
          5TH HIGHEST VALUE IS       0.00446 AT (  420215.50,  3725097.50,      0.00,      0.00)  DC      NA
          6TH HIGHEST VALUE IS       0.00441 AT (  420218.19,  3725101.25,      0.00,      0.00)  DC      NA
          7TH HIGHEST VALUE IS       0.00440 AT (  420217.09,  3725090.00,      0.00,      0.00)  DC      NA
          8TH HIGHEST VALUE IS       0.00440 AT (  420185.50,  3725078.00,      0.00,      0.00)  DC      NA
          9TH HIGHEST VALUE IS       0.00438 AT (  420184.50,  3725078.00,      0.00,      0.00)  DC      NA
         10TH HIGHEST VALUE IS       0.00433 AT (  420217.09,  3725080.00,      0.00,      0.00)  DC      NA

9         1ST HIGHEST VALUE IS       0.00016 AT (  420218.19,  3725101.25,      0.00,      0.00)  DC      NA
          2ND HIGHEST VALUE IS       0.00016 AT (  420215.50,  3725097.50,      0.00,      0.00)  DC      NA
          3RD HIGHEST VALUE IS       0.00016 AT (  420184.50,  3725078.00,      0.00,      0.00)  DC      NA
          4TH HIGHEST VALUE IS       0.00016 AT (  420185.50,  3725078.00,      0.00,      0.00)  DC      NA
          5TH HIGHEST VALUE IS       0.00016 AT (  420209.59,  3725089.25,      0.00,      0.00)  DC      NA
          6TH HIGHEST VALUE IS       0.00016 AT (  420222.31,  3725097.75,      0.00,      0.00)  DC      NA
          7TH HIGHEST VALUE IS       0.00015 AT (  420217.09,  3725090.00,      0.00,      0.00)  DC      NA
          8TH HIGHEST VALUE IS       0.00015 AT (  420195.50,  3725078.00,      0.00,      0.00)  DC      NA
          9TH HIGHEST VALUE IS       0.00015 AT (  420203.81,  3725081.25,      0.00,      0.00)  DC      NA
         10TH HIGHEST VALUE IS       0.00015 AT (  420178.69,  3725071.00,      0.00,      0.00)  DC      NA

 *** RECEPTOR TYPES:  GC = GRIDCART
                      GP = GRIDPOLR
                      DC = DISCCART
                      DP = DISCPOLR
                      BD = BOUNDARY
```

```
 *** ISCST3 - VERSION 02035 ***    ***  Uptown Newport HRA                                          ***        03/21/12
                                   ***                                                              ***        10:18:36
**MODELOPTs:                                                                                                   PAGE 134
CONC                    URBAN FLAT                        NOSTD         NOCALM


*** Message Summary : ISCST3 Model Execution ***

 --------- Summary of Total Messages --------

A Total of            0 Fatal Error Message(s)
A Total of           17 Warning Message(s)
A Total of         1356 Informational Message(s)

A Total of         1356 Calm Hours Identified


   ******** FATAL ERROR MESSAGES ********
              ***  NONE  ***


   ********   WARNING MESSAGES   ********
SO W320    47 PPARM :Input Parameter May Be Out-of-Range for Parameter       DS
SO W320    54 PPARM :Input Parameter May Be Out-of-Range for Parameter       DS
SO W320    55 PPARM :Input Parameter May Be Out-of-Range for Parameter       DS
OU W565  1216 PERPLT:Possible Conflict With Dynamically Allocated FUNIT PLOTFILE
OU W565  1217 PERPLT:Possible Conflict With Dynamically Allocated FUNIT PLOTFILE
OU W565  1218 PERPLT:Possible Conflict With Dynamically Allocated FUNIT PLOTFILE
OU W565  1219 PERPLT:Possible Conflict With Dynamically Allocated FUNIT PLOTFILE
OU W565  1220 PERPLT:Possible Conflict With Dynamically Allocated FUNIT PLOTFILE
OU W565  1221 PERPLT:Possible Conflict With Dynamically Allocated FUNIT PLOTFILE
OU W565  1222 PERPLT:Possible Conflict With Dynamically Allocated FUNIT PLOTFILE
OU W565  1223 PERPLT:Possible Conflict With Dynamically Allocated FUNIT PLOTFILE
OU W565  1224 PERPLT:Possible Conflict With Dynamically Allocated FUNIT PLOTFILE
OU W565  1225 PERPLT:Possible Conflict With Dynamically Allocated FUNIT PLOTFILE
OU W565  1226 PERPLT:Possible Conflict With Dynamically Allocated FUNIT PLOTFILE
OU W565  1227 PERPLT:Possible Conflict With Dynamically Allocated FUNIT PLOTFILE
OU W565  1228 PERPLT:Possible Conflict With Dynamically Allocated FUNIT PLOTFILE
OU W565  1229 PERPLT:Possible Conflict With Dynamically Allocated FUNIT PLOTFILE

   ************************************
   *** ISCST3 Finishes Successfully ***
   ************************************
```

```
 *** ISCST3 - VERSION 02035 ***    ***  Uptown Newport HRA                                          ***        03/21/12
                                   ***                                                              ***        10:13:18
**MODELOPTs:                                                                                                   PAGE   1
CONC                    URBAN FLAT                       NOSTD         NOCALM

                                          ***     MODEL SETUP OPTIONS SUMMARY       ***
- - - - - - - - - - - - - - - - - - - - - - - - - - - - - - - - - - - - - - - - - - - - - - - - - - - - - - - - - - - - - - - - - - - -

**Intermediate Terrain Processing is Selected

**Model Is Setup For Calculation of Average CONCentration Values.

  --  SCAVENGING/DEPOSITION LOGIC --
**Model Uses NO DRY DEPLETION.  DDPLETE =  F
**Model Uses NO WET DEPLETION.  WDPLETE =  F
**NO WET SCAVENGING Data Provided.
**NO GAS DRY DEPOSITION Data Provided.
**Model Does NOT Use GRIDDED TERRAIN Data for Depletion Calculations

**Model Uses URBAN Dispersion.

**Model Uses User-Specified Options:
           1. Final Plume Rise.
           2. Not Use Stack-tip Downwash.
           3. Buoyancy-induced Dispersion.
           4. Not Use Calms Processing Routine.
           5. Not Use Missing Data Processing Routine.
           6. Default Wind Profile Exponents.
           7. Default Vertical Potential Temperature Gradients.

**Model Assumes Receptors on FLAT Terrain.

**Model Assumes No FLAGPOLE Receptor Heights.

**Model Calculates ANNUAL Averages Only

**This Run Includes:     9 Source(s);      9 Source Group(s); and    1162 Receptor(s)

**The Model Assumes A Pollutant Type of:  OTHER

**Model Set To Continue RUNning After the Setup Testing.

**Output Options Selected:
         Model Outputs Tables of ANNUAL Averages by Receptor
         Model Outputs External File(s) of High Values for Plotting (PLOTFILE Keyword)

**Misc. Inputs:  Anem. Hgt. (m) =    10.00 ;    Decay Coef. =    0.000     ;    Rot. Angle =     0.0
                 Emission Units = GRAMS/SEC                                 ;  Emission Rate Unit Factor =   0.10000E+07
                 Output Units   = MICROGRAMS/M**3

**Approximate Storage Requirements of Model =     1.3 MB of RAM.

**Input Runstream File:          ISCST3.INP
**Output Print File:             ISCST3.OUT
```

```
 *** ISCST3 - VERSION 02035 ***    ***  Uptown Newport HRA                                          ***        03/21/12
                                   ***                                                              ***        10:13:18
**MODELOPTs:                                                                                                   PAGE   2
CONC                    URBAN FLAT                       NOSTD         NOCALM
```

*** POINT SOURCE DATA ***

SOURCE ID	NUMBER PART. CATS.	EMISSION RATE (GRAMS/SEC)	X (METERS)	Y (METERS)	BASE ELEV. (METERS)	STACK HEIGHT (METERS)	STACK TEMP. (DEG.K)	STACK EXIT VEL. (M/SEC)	STACK DIAMETER (METERS)	BUILDING EXISTS	EMISSION RATE SCALAR VARY BY
1	0	0.37169E-03	420578.5	3725274.5	0.0	4.57	330.00	0.01	7.98	NO	HROFDY
5A	0	0.80000E-02	420663.9	3725348.0	0.0	4.57	622.00	0.01	5.56	NO	HROFDY
5B	0	0.89773E+00	420644.3	3725341.5	0.0	7.62	533.00	0.01	8.66	NO	HROFDY
6	0	0.24700E+00	420321.0	3724675.2	0.0	4.72	622.00	0.01	26.18	NO	HROFDY
7	0	0.26082E-02	420266.8	3724744.8	0.0	4.57	330.00	0.01	10.19	NO	HROFDY
8	0	0.18270E-02	420042.8	3725259.0	0.0	7.62	330.00	0.01	9.72	NO	HROFDY
9	0	0.71000E-01	419767.0	3725109.2	0.0	8.69	622.00	0.01	13.61	NO	HROFDY
2	0	0.69000E-01	420108.4	3724836.8	0.0	32.61	622.00	0.01	13.61	NO	HROFDY
3	0	0.69000E-01	420122.4	3724786.8	0.0	32.61	622.00	0.01	13.61	NO	HROFDY

```
 *** ISCST3 - VERSION 02035 ***    ***  Uptown Newport HRA                                          ***        03/21/12
                                   ***                                                              ***        10:13:18
**MODELOPTs:                                                                                                   PAGE  19
CONC                    URBAN FLAT                       NOSTD         NOCALM
```

*** METEOROLOGICAL DAYS SELECTED FOR PROCESSING ***
(1=YES; 0=NO)

```
1 1 1 1 1 1 1 1 1 1   1 1 1 1 1 1 1 1 1 1   1 1 1 1 1 1 1 1 1 1   1 1 1 1 1 1 1 1 1 1   1 1 1 1 1 1 1 1 1 1
1 1 1 1 1 1 1 1 1 1   1 1 1 1 1 1 1 1 1 1   1 1 1 1 1 1 1 1 1 1   1 1 1 1 1 1 1 1 1 1   1 1 1 1 1 1 1 1 1 1
1 1 1 1 1 1 1 1 1 1   1 1 1 1 1 1 1 1 1 1   1 1 1 1 1 1 1 1 1 1   1 1 1 1 1 1 1 1 1 1   1 1 1 1 1 1 1 1 1 1
1 1 1 1 1 1 1 1 1 1   1 1 1 1 1 1 1 1 1 1   1 1 1 1 1 1 1 1 1 1   1 1 1 1 1 1 1 1 1 1   1 1 1 1 1 1 1 1 1 1
1 1 1 1 1 1 1 1 1 1   1 1 1 1 1 1 1 1 1 1   1 1 1 1 1 1 1 1 1 1   1 1 1 1 1 1 1 1 1 1   1 1 1 1 1 1 1 1 1 1
1 1 1 1 1 1 1 1 1 1   1 1 1 1 1 1 1 1 1 1   1 1 1 1 1 1 1 1 1 1   1 1 1 1 1 1 1 1 1 1   1 1 1 1 1 1 1 1 1 1
1 1 1 1 1 1 1 1 1 1   1 1 1 1 1 1 1 1 1 1   1 1 1 1 1 1 1 1 1 1   1 1 1 1 1 1 1 1 1 1   1 1 1 1 1 1 1 1 1 1
1 1 1 1 1 1 1 1 1 1   1 1 1 1 1 1
```

NOTE: METEOROLOGICAL DATA ACTUALLY PROCESSED WILL ALSO DEPEND ON WHAT IS INCLUDED IN THE DATA FILE.

*** UPPER BOUND OF FIRST THROUGH FIFTH WIND SPEED CATEGORIES ***
(METERS/SEC)

1.54, 3.09, 5.14, 8.23, 10.80,

*** WIND PROFILE EXPONENTS ***

STABILITY CATEGORY	WIND SPEED CATEGORY 1	2	3	4	5	6
A	.15000E+00	.15000E+00	.15000E+00	.15000E+00	.15000E+00	.15000E+00
B	.15000E+00	.15000E+00	.15000E+00	.15000E+00	.15000E+00	.15000E+00
C	.20000E+00	.20000E+00	.20000E+00	.20000E+00	.20000E+00	.20000E+00
D	.25000E+00	.25000E+00	.25000E+00	.25000E+00	.25000E+00	.25000E+00
E	.30000E+00	.30000E+00	.30000E+00	.30000E+00	.30000E+00	.30000E+00
F	.30000E+00	.30000E+00	.30000E+00	.30000E+00	.30000E+00	.30000E+00

*** VERTICAL POTENTIAL TEMPERATURE GRADIENTS ***
(DEGREES KELVIN PER METER)

STABILITY CATEGORY	WIND SPEED CATEGORY 1	2	3	4	5	6
A	.00000E+00	.00000E+00	.00000E+00	.00000E+00	.00000E+00	.00000E+00
B	.00000E+00	.00000E+00	.00000E+00	.00000E+00	.00000E+00	.00000E+00
C	.00000E+00	.00000E+00	.00000E+00	.00000E+00	.00000E+00	.00000E+00
D	.00000E+00	.00000E+00	.00000E+00	.00000E+00	.00000E+00	.00000E+00
E	.20000E-01	.20000E-01	.20000E-01	.20000E-01	.20000E-01	.20000E-01
F	.35000E-01	.35000E-01	.35000E-01	.35000E-01	.35000E-01	.35000E-01

```
 *** ISCST3 - VERSION 02035 ***    ***  Uptown Newport HRA                                                   ***        03/21/12
                                   ***                                                                       ***        10:13:18
**MODELOPTs:                                                                                                            PAGE  20
CONC                   URBAN FLAT                      NOSTD         NOCALM


                     *** THE FIRST  24 HOURS OF METEOROLOGICAL DATA ***

     FILE:   C:\Users\sbush\DOCUME~1\!METFI~1\SCAQMD~1\METDAT~2\COSMESA.ASC
     FORMAT: (4I2,2F9.4,F6.1,I2,2F7.1,f9.4,f10.1,f8.4,i4,f7.2)
     SURFACE STATION NO.:  53126                   UPPER AIR STATION NO.:  91919
                    NAME: UNKNOWN                                  NAME: UNKNOWN
                    YEAR:   1981                                   YEAR:   1981
```

YR MN DY HR	FLOW VECTOR	SPEED (M/S)	TEMP (K)	STAB CLASS	MIXING HEIGHT (M) RURAL	MIXING HEIGHT (M) URBAN	USTAR (M/S)	M-O LENGTH (M)	Z-0 (M)	IPCODE	PRATE (mm/HR)
81 01 01 01	247.3	1.00	282.6	7	387.2	152.0	0.0000	0.0	0.0000	0	0.00
81 01 01 02	304.9	1.00	282.6	7	397.3	152.0	0.0000	0.0	0.0000	0	0.00
81 01 01 03	355.0	1.34	283.1	7	407.3	152.0	0.0000	0.0	0.0000	0	0.00
81 01 01 04	98.5	1.00	283.7	7	417.4	152.0	0.0000	0.0	0.0000	0	0.00
81 01 01 05	219.0	1.00	281.5	7	427.5	152.0	0.0000	0.0	0.0000	0	0.00
81 01 01 06	274.5	1.00	281.5	7	437.5	152.0	0.0000	0.0	0.0000	0	0.00
81 01 01 07	274.5	0.00	280.4	7	447.6	152.0	0.0000	0.0	0.0000	0	0.00
81 01 01 08	157.1	1.00	282.0	6	71.6	202.6	0.0000	0.0	0.0000	0	0.00
81 01 01 09	186.5	1.00	286.5	5	146.0	255.1	0.0000	0.0	0.0000	0	0.00
81 01 01 10	211.6	1.00	290.4	4	220.4	307.7	0.0000	0.0	0.0000	0	0.00
81 01 01 11	44.1	1.34	294.3	3	294.8	360.3	0.0000	0.0	0.0000	0	0.00
81 01 01 12	35.6	2.24	295.4	3	369.2	412.9	0.0000	0.0	0.0000	0	0.00
81 01 01 13	42.2	1.79	297.6	3	443.6	465.4	0.0000	0.0	0.0000	0	0.00
81 01 01 14	56.7	1.34	295.9	2	518.0	518.0	0.0000	0.0	0.0000	0	0.00
81 01 01 15	67.3	2.24	294.8	3	518.0	518.0	0.0000	0.0	0.0000	0	0.00
81 01 01 16	75.7	1.79	293.1	4	518.0	518.0	0.0000	0.0	0.0000	0	0.00
81 01 01 17	65.1	1.34	290.4	5	518.0	510.6	0.0000	0.0	0.0000	0	0.00
81 01 01 18	97.6	1.00	288.1	6	518.0	468.1	0.0000	0.0	0.0000	0	0.00
81 01 01 19	110.5	1.00	287.6	7	518.0	425.6	0.0000	0.0	0.0000	0	0.00
81 01 01 20	100.7	1.00	287.0	7	518.0	383.1	0.0000	0.0	0.0000	0	0.00
81 01 01 21	133.6	1.00	285.9	7	518.0	340.6	0.0000	0.0	0.0000	0	0.00
81 01 01 22	92.0	1.00	285.9	7	518.0	298.0	0.0000	0.0	0.0000	0	0.00
81 01 01 23	0.7	1.00	285.4	7	518.0	255.5	0.0000	0.0	0.0000	0	0.00
81 01 01 24	269.7	1.00	284.8	7	518.0	213.0	0.0000	0.0	0.0000	0	0.00

```
*** NOTES:  STABILITY CLASS 1=A, 2=B, 3=C, 4=D, 5=E AND 6=F.
            FLOW VECTOR IS DIRECTION TOWARD WHICH WIND IS BLOWING.
```

```
 *** ISCST3 - VERSION 02035 ***    ***  Uptown Newport HRA                                        ***        03/21/12
                                   ***                                                            ***        10:13:18
**MODELOPTs:                                                                                                 PAGE 156
CONC                    URBAN FLAT                    NOSTD         NOCALM

                                          *** THE SUMMARY OF MAXIMUM ANNUAL (   1 YRS) RESULTS ***


                                      ** CONC OF OTHER    IN MICROGRAMS/M**3                          **

                                                                                                     NETWORK
GROUP ID                      AVERAGE CONC               RECEPTOR  (XR, YR, ZELEV, ZFLAG)   OF TYPE  GRID-ID
- - - - - - - - - - - - - - - - - - - - - - - - - - - - - - - - - - - - - - - - - - - - - - - - - - - - - - - - - - - -

1        1ST HIGHEST VALUE IS       0.01154 AT (  420511.69,  3725271.75,      0.00,      0.00)  DC      NA
         2ND HIGHEST VALUE IS       0.01109 AT (  420519.41,  3725265.50,      0.00,      0.00)  DC      NA
         3RD HIGHEST VALUE IS       0.01050 AT (  420508.91,  3725267.25,      0.00,      0.00)  DC      NA
         4TH HIGHEST VALUE IS       0.01029 AT (  420503.91,  3725278.00,      0.00,      0.00)  DC      NA
         5TH HIGHEST VALUE IS       0.00943 AT (  420498.91,  3725267.25,      0.00,      0.00)  DC      NA
         6TH HIGHEST VALUE IS       0.00874 AT (  420488.91,  3725277.25,      0.00,      0.00)  DC      NA
         7TH HIGHEST VALUE IS       0.00866 AT (  420527.09,  3725259.00,      0.00,      0.00)  DC      NA
         8TH HIGHEST VALUE IS       0.00850 AT (  420488.91,  3725267.25,      0.00,      0.00)  DC      NA
         9TH HIGHEST VALUE IS       0.00840 AT (  420496.19,  3725284.50,      0.00,      0.00)  DC      NA
        10TH HIGHEST VALUE IS       0.00807 AT (  420528.91,  3725257.50,      0.00,      0.00)  DC      NA

2        1ST HIGHEST VALUE IS       0.00004 AT (  420293.09,  3725102.75,      0.00,      0.00)  DC      NA
         2ND HIGHEST VALUE IS       0.00004 AT (  420283.09,  3725092.75,      0.00,      0.00)  DC      NA
         3RD HIGHEST VALUE IS       0.00004 AT (  420293.09,  3725112.75,      0.00,      0.00)  DC      NA
         4TH HIGHEST VALUE IS       0.00004 AT (  420283.09,  3725102.75,      0.00,      0.00)  DC      NA
         5TH HIGHEST VALUE IS       0.00004 AT (  420303.09,  3725112.75,      0.00,      0.00)  DC      NA
         6TH HIGHEST VALUE IS       0.00004 AT (  420293.09,  3725092.75,      0.00,      0.00)  DC      NA
         7TH HIGHEST VALUE IS       0.00004 AT (  420303.09,  3725122.75,      0.00,      0.00)  DC      NA
         8TH HIGHEST VALUE IS       0.00004 AT (  420283.09,  3725082.75,      0.00,      0.00)  DC      NA
         9TH HIGHEST VALUE IS       0.00004 AT (  420273.09,  3725082.75,      0.00,      0.00)  DC      NA
        10TH HIGHEST VALUE IS       0.00004 AT (  420273.09,  3725092.75,      0.00,      0.00)  DC      NA

3        1ST HIGHEST VALUE IS       0.00005 AT (  420114.00,  3725062.00,      0.00,      0.00)  DC      NA
         2ND HIGHEST VALUE IS       0.00005 AT (  420120.50,  3725069.50,      0.00,      0.00)  DC      NA
         3RD HIGHEST VALUE IS       0.00005 AT (  420107.41,  3725054.50,      0.00,      0.00)  DC      NA
         4TH HIGHEST VALUE IS       0.00005 AT (  420127.00,  3725077.00,      0.00,      0.00)  DC      NA
         5TH HIGHEST VALUE IS       0.00005 AT (  420113.09,  3725052.75,      0.00,      0.00)  DC      NA
         6TH HIGHEST VALUE IS       0.00005 AT (  420100.91,  3725046.75,      0.00,      0.00)  DC      NA
         7TH HIGHEST VALUE IS       0.00005 AT (  420123.09,  3725062.75,      0.00,      0.00)  DC      NA
         8TH HIGHEST VALUE IS       0.00005 AT (  420133.59,  3725084.75,      0.00,      0.00)  DC      NA
         9TH HIGHEST VALUE IS       0.00005 AT (  420103.09,  3725042.75,      0.00,      0.00)  DC      NA
        10TH HIGHEST VALUE IS       0.00005 AT (  420133.09,  3725072.75,      0.00,      0.00)  DC      NA
```

```
 *** ISCST3 - VERSION 02035 ***    ***  Uptown Newport HRA                                          ***        03/21/12
                                   ***                                                              ***        10:13:18
**MODELOPTs:                                                                                                   PAGE 157
CONC                    URBAN FLAT                        NOSTD          NOCALM

                                           *** THE SUMMARY OF MAXIMUM ANNUAL (   1 YRS) RESULTS ***


                                       ** CONC OF OTHER    IN MICROGRAMS/M**3                        **

                                                                                                     NETWORK
GROUP ID                      AVERAGE CONC               RECEPTOR  (XR, YR, ZELEV, ZFLAG)   OF TYPE  GRID-ID
- - - - - - - - - - - - - - - - - - - - - - - - - - - - - - - - - - - - - - - - - - - - - - - - - - - - - - - - - - - -

5A       1ST HIGHEST VALUE IS       0.00031 AT (  420442.09,  3725328.75,      0.00,      0.00)  DC       NA
         2ND HIGHEST VALUE IS       0.00031 AT (  420449.81,  3725322.50,      0.00,      0.00)  DC       NA
         3RD HIGHEST VALUE IS       0.00030 AT (  420434.41,  3725335.25,      0.00,      0.00)  DC       NA
         4TH HIGHEST VALUE IS       0.00030 AT (  420438.91,  3725327.25,      0.00,      0.00)  DC       NA
         5TH HIGHEST VALUE IS       0.00030 AT (  420457.50,  3725316.00,      0.00,      0.00)  DC       NA
         6TH HIGHEST VALUE IS       0.00030 AT (  420429.19,  3725339.50,      0.00,      0.00)  DC       NA
         7TH HIGHEST VALUE IS       0.00030 AT (  420448.91,  3725317.25,      0.00,      0.00)  DC       NA
         8TH HIGHEST VALUE IS       0.00029 AT (  420427.09,  3725336.75,      0.00,      0.00)  DC       NA
         9TH HIGHEST VALUE IS       0.00029 AT (  420465.31,  3725309.75,      0.00,      0.00)  DC       NA
        10TH HIGHEST VALUE IS       0.00029 AT (  420428.91,  3725327.25,      0.00,      0.00)  DC       NA

5B       1ST HIGHEST VALUE IS       2.65864 AT (  420449.81,  3725322.50,      0.00,      0.00)  DC       NA
         2ND HIGHEST VALUE IS       2.63125 AT (  420457.50,  3725316.00,      0.00,      0.00)  DC       NA
         3RD HIGHEST VALUE IS       2.63119 AT (  420442.09,  3725328.75,      0.00,      0.00)  DC       NA
         4TH HIGHEST VALUE IS       2.57677 AT (  420438.91,  3725327.25,      0.00,      0.00)  DC       NA
         5TH HIGHEST VALUE IS       2.56258 AT (  420434.41,  3725335.25,      0.00,      0.00)  DC       NA
         6TH HIGHEST VALUE IS       2.55763 AT (  420465.31,  3725309.75,      0.00,      0.00)  DC       NA
         7TH HIGHEST VALUE IS       2.55752 AT (  420448.91,  3725317.25,      0.00,      0.00)  DC       NA
         8TH HIGHEST VALUE IS       2.49531 AT (  420429.19,  3725339.50,      0.00,      0.00)  DC       NA
         9TH HIGHEST VALUE IS       2.47176 AT (  420427.09,  3725336.75,      0.00,      0.00)  DC       NA
        10TH HIGHEST VALUE IS       2.45392 AT (  420428.91,  3725327.25,      0.00,      0.00)  DC       NA

6        1ST HIGHEST VALUE IS       0.00058 AT (  420072.00,  3724968.00,      0.00,      0.00)  DC       NA
         2ND HIGHEST VALUE IS       0.00058 AT (  420079.69,  3724961.50,      0.00,      0.00)  DC       NA
         3RD HIGHEST VALUE IS       0.00058 AT (  420068.31,  3724971.00,      0.00,      0.00)  DC       NA
         4TH HIGHEST VALUE IS       0.00058 AT (  420082.50,  3724962.00,      0.00,      0.00)  DC       NA
         5TH HIGHEST VALUE IS       0.00058 AT (  420087.50,  3724955.25,      0.00,      0.00)  DC       NA
         6TH HIGHEST VALUE IS       0.00058 AT (  420071.81,  3724974.75,      0.00,      0.00)  DC       NA
         7TH HIGHEST VALUE IS       0.00058 AT (  420095.19,  3724949.00,      0.00,      0.00)  DC       NA
         8TH HIGHEST VALUE IS       0.00058 AT (  420082.50,  3724972.00,      0.00,      0.00)  DC       NA
         9TH HIGHEST VALUE IS       0.00058 AT (  420092.50,  3724962.00,      0.00,      0.00)  DC       NA
        10TH HIGHEST VALUE IS       0.00058 AT (  420103.00,  3724942.50,      0.00,      0.00)  DC       NA
```

```
 *** ISCST3 - VERSION 02035 ***    ***  Uptown Newport HRA                                                    ***        03/21/12
                                   ***                                                                        ***        10:13:18
**MODELOPTs:                                                                                                             PAGE 158
CONC                   URBAN FLAT                       NOSTD         NOCALM

                                          *** THE SUMMARY OF MAXIMUM ANNUAL (   1 YRS) RESULTS ***


                                      ** CONC OF OTHER    IN MICROGRAMS/M**3                          **

                                                                                                    NETWORK
GROUP ID                      AVERAGE CONC               RECEPTOR  (XR, YR, ZELEV, ZFLAG)   OF TYPE  GRID-ID
- - - - - - - - - - - - - - - - - - - - - - - - - - - - - - - - - - - - - - - - - - - - - - - - - - - - - - - - - - - - -

7        1ST HIGHEST VALUE IS       0.02431 AT (  420279.91,  3724874.00,      0.00,      0.00)  DC      NA
         2ND HIGHEST VALUE IS       0.02430 AT (  420273.50,  3724866.25,      0.00,      0.00)  DC      NA
         3RD HIGHEST VALUE IS       0.02416 AT (  420286.31,  3724881.75,      0.00,      0.00)  DC      NA
         4TH HIGHEST VALUE IS       0.02416 AT (  420267.09,  3724858.50,      0.00,      0.00)  DC      NA
         5TH HIGHEST VALUE IS       0.02388 AT (  420260.81,  3724851.00,      0.00,      0.00)  DC      NA
         6TH HIGHEST VALUE IS       0.02383 AT (  420292.59,  3724889.50,      0.00,      0.00)  DC      NA
         7TH HIGHEST VALUE IS       0.02344 AT (  420299.00,  3724897.00,      0.00,      0.00)  DC      NA
         8TH HIGHEST VALUE IS       0.02330 AT (  420254.41,  3724843.25,      0.00,      0.00)  DC      NA
         9TH HIGHEST VALUE IS       0.02319 AT (  420272.50,  3724872.00,      0.00,      0.00)  DC      NA
        10TH HIGHEST VALUE IS       0.02293 AT (  420305.41,  3724904.75,      0.00,      0.00)  DC      NA

8        1ST HIGHEST VALUE IS       0.02484 AT (  420278.69,  3725252.75,      0.00,      0.00)  DC      NA
         2ND HIGHEST VALUE IS       0.02480 AT (  420277.41,  3725251.25,      0.00,      0.00)  DC      NA
         3RD HIGHEST VALUE IS       0.02425 AT (  420270.81,  3725243.50,      0.00,      0.00)  DC      NA
         4TH HIGHEST VALUE IS       0.02395 AT (  420273.09,  3725242.75,      0.00,      0.00)  DC      NA
         5TH HIGHEST VALUE IS       0.02376 AT (  420285.00,  3725247.75,      0.00,      0.00)  DC      NA
         6TH HIGHEST VALUE IS       0.02323 AT (  420283.09,  3725242.75,      0.00,      0.00)  DC      NA
         7TH HIGHEST VALUE IS       0.02307 AT (  420264.31,  3725236.00,      0.00,      0.00)  DC      NA
         8TH HIGHEST VALUE IS       0.02235 AT (  420292.81,  3725241.50,      0.00,      0.00)  DC      NA
         9TH HIGHEST VALUE IS       0.02181 AT (  420273.09,  3725232.75,      0.00,      0.00)  DC      NA
        10TH HIGHEST VALUE IS       0.02132 AT (  420283.09,  3725232.75,      0.00,      0.00)  DC      NA

9        1ST HIGHEST VALUE IS       0.00019 AT (  420146.59,  3725099.75,      0.00,      0.00)  DC      NA
         2ND HIGHEST VALUE IS       0.00019 AT (  420153.19,  3725107.50,      0.00,      0.00)  DC      NA
         3RD HIGHEST VALUE IS       0.00019 AT (  420140.09,  3725092.25,      0.00,      0.00)  DC      NA
         4TH HIGHEST VALUE IS       0.00019 AT (  420153.09,  3725102.75,      0.00,      0.00)  DC      NA
         5TH HIGHEST VALUE IS       0.00019 AT (  420159.69,  3725115.00,      0.00,      0.00)  DC      NA
         6TH HIGHEST VALUE IS       0.00019 AT (  420143.09,  3725092.75,      0.00,      0.00)  DC      NA
         7TH HIGHEST VALUE IS       0.00018 AT (  420163.09,  3725112.75,      0.00,      0.00)  DC      NA
         8TH HIGHEST VALUE IS       0.00018 AT (  420133.59,  3725084.75,      0.00,      0.00)  DC      NA
         9TH HIGHEST VALUE IS       0.00018 AT (  420166.31,  3725122.50,      0.00,      0.00)  DC      NA
        10TH HIGHEST VALUE IS       0.00018 AT (  420163.09,  3725102.75,      0.00,      0.00)  DC      NA


 *** RECEPTOR TYPES:  GC = GRIDCART
                      GP = GRIDPOLR
                      DC = DISCCART
                      DP = DISCPOLR
                      BD = BOUNDARY
```

```
 *** ISCST3 - VERSION 02035 ***    ***  Uptown Newport HRA                                          ***        03/21/12
                                   ***                                                              ***        10:13:18
**MODELOPTs:                                                                                                   PAGE 159
CONC                    URBAN FLAT                        NOSTD         NOCALM


*** Message Summary : ISCST3 Model Execution ***

 --------- Summary of Total Messages --------

A Total of            0 Fatal Error Message(s)
A Total of           10 Warning Message(s)
A Total of         1356 Informational Message(s)

A Total of         1356 Calm Hours Identified


   ******** FATAL ERROR MESSAGES ********
              ***  NONE  ***


   ********   WARNING MESSAGES   ********
SO W320    37 PPARM :Input Parameter May Be Out-of-Range for Parameter       DS
OU W565  2248 PERPLT:Possible Conflict With Dynamically Allocated FUNIT PLOTFILE
OU W565  2249 PERPLT:Possible Conflict With Dynamically Allocated FUNIT PLOTFILE
OU W565  2250 PERPLT:Possible Conflict With Dynamically Allocated FUNIT PLOTFILE
OU W565  2251 PERPLT:Possible Conflict With Dynamically Allocated FUNIT PLOTFILE
OU W565  2252 PERPLT:Possible Conflict With Dynamically Allocated FUNIT PLOTFILE
OU W565  2253 PERPLT:Possible Conflict With Dynamically Allocated FUNIT PLOTFILE
OU W565  2254 PERPLT:Possible Conflict With Dynamically Allocated FUNIT PLOTFILE
OU W565  2255 PERPLT:Possible Conflict With Dynamically Allocated FUNIT PLOTFILE
OU W565  2256 PERPLT:Possible Conflict With Dynamically Allocated FUNIT PLOTFILE

   ************************************
   *** ISCST3 Finishes Successfully ***
   ************************************
```

Appendix E.
Risk Calculation Worksheets

Table E1
Quantification of Carcinogenic Risks and Noncarcinogenic Risks
Resident Exposure Scenario - Phase I

Source Number*	Source	Mass GLC		Weight Fraction	Contaminant	Carcinogenic Risk			Noncarcinogenic Hazards/ Toxicological Endpoints**									
						URF	CPF	RISK	REL	RfD	RESP	CNS/PNS	CV/BL	IMMUN	KIDN	GI/LV	REPRO	EYES
		(ug/m^3)	(mg/m^3)			$(ug/m^3)^{-1}$	$(mg/kg/day)^{-1}$		(ug/m^3)	(mg/kg/day)								
	(a)	(b)	(c)	(d)	(e)	(f)	(g)	(h)	(i)	(j)	(k)	(l)	(m)	(n)	(o)	(p)	(q)	(r)
1	Burger King (Charbroiler)	1.67E-03	1.67E-06	1.00E+00	Acetaldehyde	2.7E-06	9.5E-03	4.1E-09	1.4E+02	4.0E-02	1.2E-05							
2	Conexant Systems Inc. (Generator)	4.00E-05	4.00E-08	1.00E+00	Diesel Particulate	3.0E-04	1.1E+00	1.1E-08	5.0E+00	1.4E-03	8.0E-06							
3	Mindspeed (Generator)	4.00E-05	4.00E-08	1.00E+00	Diesel Particulate	3.0E-04	1.1E+00	1.1E-08	5.0E+00	1.4E-03	8.0E-06							
4	Jazz Semiconductor (Generators)	1.00E-06	1.00E-09	1.00E+00	Diesel Particulate	3.0E-04	1.1E+00	3.5E-11	5.0E+00	1.4E-03	2.0E-07							
	(Natural Gas Combution - Boilers)	5.14E+00	5.14E-03	3.02E-05	1,3-Butadiene	1.7E-04	6.0E-01	3.1E-09	2.0E+01	5.7E-03							7.8E-06	
				2.99E-04	Acetaldehyde	2.7E-06	9.5E-03	4.9E-10	1.4E+02	4.0E-02	1.1E-05							
				1.54E-04	Acrolein			0.0E+00	3.5E-01	1.0E-04	2.3E-03							
				9.95E-01	Ammonia			0.0E+00	2.0E+02	5.7E-02	2.6E-02							
				3.81E-04	Benzene	2.9E-05	1.0E-01	6.6E-09	6.0E+01	1.7E-02		3.3E-05	3.3E-05				3.3E-05	
				4.23E-04	Ethylbenzene	2.5E-06	8.8E-03	6.4E-10	2.0E+03	5.7E-01				1.1E-06	1.1E-06	1.1E-06	1.1E-06	
				9.94E-04	Formaldehyde	6.0E-06	2.1E-02	3.6E-09	9.0E+00	2.6E-03	5.7E-04							5.7E-04
				2.84E-04	n-Hexane			0.0E+00	7.0E+03	2.0E+00		2.1E-07						
				1.93E-05	Naphthalene	3.40E-05	1.2E-01	3.9E-10	9.0E+00	2.6E-03	1.1E-05							
				1.64E-03	Toluene			0.0E+00	3.0E+02	8.6E-02	2.8E-05	2.8E-05					2.8E-05	
				1.21E-03	Xylenes			0.0E+00	7.0E+02	2.0E-01	8.9E-06	8.9E-06						8.9E-06
	(Trucking Activities)	1.30E-04	1.30E-07	1.00E+00	Diesel Particulate	3.0E-04	1.1E+00	4.6E-09	5.0E+00	1.4E-03	2.6E-05							
	(Soil Vapor Extraction System)	5.42E+00	5.42E-03	2.73E-03	Benzene	2.9E-05	1.0E-01	5.0E-08	6.0E+01	1.7E-02		2.5E-04	2.5E-04				2.5E-04	
				4.45E-03	Benzyl Chloride	4.9E-05	1.7E-01	1.4E-07	2.4E+02	6.9E-02	1.0E-04							1.0E-04
				4.05E-03	Carbon Tetrachloride	4.2E-05	1.5E-01	1.1E-07	4.0E+01	1.1E-02		5.5E-04				5.5E-04	5.5E-04	
				2.43E-02	Chloroform	5.3E-06	1.9E-02	8.2E-08	3.0E+02	8.6E-02					4.4E-04	4.4E-04	4.4E-04	
				4.72E-03	Dichlorobenzene	1.1E-05	3.9E-02	3.3E-08	8.0E+02	2.3E-01	3.2E-05	3.2E-05			3.2E-05	3.2E-05		
				3.18E-03	Dichloroethane	1.6E-06	5.6E-03	3.2E-09	9.6E+02	2.8E-01	1.8E-05				1.8E-05	1.8E-05		1.8E-05
				3.41E-02	Ethylbenzene	2.5E-06	8.8E-03	5.4E-08	2.0E+03	5.7E-01				9.2E-05	9.2E-05	9.2E-05	9.2E-05	
				5.49E-03	Ethylene Dibromide	7.1E-05	2.5E-01	2.5E-07	8.0E-01	2.3E-04							3.7E-02	
				8.04E-01	n-Hexane			0.0E+00	7.0E+03	2.0E+00		6.2E-04						
				2.24E-03	Methylene Chloride	1.0E-06	3.5E-03	1.4E-09	4.0E+02	1.1E-01		3.0E-05	3.0E-05					
				1.29E-02	Methyl t-Butyl Ether	2.6E-07	9.1E-04	2.1E-09	8.0E+03	2.3E+00					8.7E-06	8.7E-06		8.7E-06
				5.89E-03	Tetrachloroethane	5.8E-05	2.0E-01	2.2E-07	7.0E+01	2.0E-02						4.6E-04		
				5.82E-03	Tetrachloroethylene	5.9E-06	2.1E-02	2.2E-08	3.5E+01	1.0E-02					9.0E-04	9.0E-04		
				4.66E-03	Trichloroethane	1.6E-05	5.6E-02	4.7E-08	1.4E+01	4.0E-03		1.8E-03				1.8E-03		
				5.74E-02	Trichloroethylene	2.0E-06	7.0E-03	7.3E-08	6.0E+02	1.7E-01		5.2E-04						5.2E-04
				2.39E-02	Vinyl Chloride	7.8E-05	2.7E-01	1.2E-06	1.0E+02	2.9E-02	1.3E-03	1.3E-03						1.3E-03
5	Harbor Justice Center (Generator)	8.00E-05	8.00E-08	1.00E+00	Diesel Particulate	3.0E-04	1.1E+00	2.2E-08	5.0E+00	1.4E-03	1.6E-05							
	(Natural Gas Combution - Boiler)	8.70E-01	8.70E-04	2.37E-04	Acetaldehyde	2.7E-06	9.5E-03	5.1E-10	1.4E+02	4.0E-02	1.5E-06							
				1.49E-04	Acrolein			0.0E+00	3.5E-01	1.0E-04	3.7E-04							
				9.94E-01	Ammonia			0.0E+00	2.0E+02	5.7E-02	4.3E-03							
				4.42E-04	Benzene	2.9E-05	1.0E-01	1.0E-08	6.0E+01	1.7E-02		6.4E-06	6.4E-06				6.4E-06	
				5.25E-04	Ethylbenzene	2.5E-06	8.8E-03	1.0E-09	2.0E+03	5.7E-01				2.3E-07	2.3E-07	2.3E-07	2.3E-07	
				9.39E-04	Formaldehyde	6.0E-06	2.1E-02	4.5E-09	9.0E+00	2.6E-03	9.1E-05							9.1E-05
				3.48E-04	n-Hexane			0.0E+00	7.0E+03	2.0E+00		4.3E-08						
				1.66E-05	Naphthalene	3.40E-05	1.2E-01	4.5E-10	9.0E+00	2.6E-03	1.6E-06							
				2.02E-03	Toluene			0.0E+00	3.0E+02	8.6E-02	5.9E-06	5.9E-06					5.9E-06	
				1.50E-03	Xylenes			0.0E+00	7.0E+02	2.0E-01	1.9E-06	1.9E-06						1.9E-06
6	Impac Funding Co. (Generator)	5.80E-04	5.80E-07	1.00E+00	Diesel Particulate	3.0E-04	1.1E+00	1.6E-07	5.0E+00	1.4E-03	1.2E-04							
7	Kimera (Charbroiler)	2.38E-02	2.38E-05	1.00E+00	Acetaldehyde	2.7E-06	9.5E-03	5.8E-08	1.4E+02	4.0E-02	1.7E-04							
8	The Pacific Club (Charbroiler)	4.52E-03	4.52E-06	1.00E+00	Acetaldehyde	2.7E-06	9.5E-03	1.1E-08	1.4E+02	4.0E-02	3.2E-05							
9	Newport Place (Generator)	1.60E-04	1.60E-07	1.00E+00	Diesel Particulate	3.0E-04	1.1E+00	4.4E-08	5.0E+00	1.4E-03	3.2E-05							
	TOTAL							2.6E-06			3.5E-02	5.2E-03	3.2E-04	9.4E-05	1.5E-03	4.3E-03	3.9E-02	2.6E-03

** Key to Toxicological Endpoints

RESP	Respiratory System
CNS/PNS	Central/Peripheral Nervous System
CV/BL	Cardiovascular/Blood System
IMMUN	Immune System
KIDN	Kidney
GI/LV	Gastrointestinal System/Liver
REPRO	Reproductive System (e.g. teratogenic and developmental effects)
EYES	Eye irritation and/or other effects

Note: Exposure factors used to calculate contaminant intake

exposure frequency (days/year)	350
exposure duration (years)	70
exposure duration to Jazz Semiconductor (years)	9
inhalation rate (m^3/day)	19.0
average body weight (kg)	70.0
averaging time $_{(cancer)}$ (days)	25,550
averaging time $_{(noncancer)}$ (days)	25,550

Table E2
Quantification of Carcinogenic Risks and Noncarcinogenic Risks
Resident Exposure Scenario - Phase II

Source Number*	Source	Mass GLC		Weight Fraction	Contaminant	Carcinogenic Risk			Noncarcinogenic Hazards/ Toxicological Endpoints**									
						URF	CPF	RISK	REL	RfD	RESP	CNS/PNS	CV/BL	IMMUN	KIDN	GI/LV	REPRO	EYES
		(ug/m^3)	(mg/m^3)			(ug/m^3)$^{-1}$	(mg/kg/day)$^{-1}$		(ug/m^3)	(mg/kg/day)								
	(a)	(b)	(c)	(d)	(e)	(f)	(g)	(h)	(i)	(j)	(k)	(l)	(m)	(n)	(o)	(p)	(q)	(r)
1	Burger King (Charbroiler)	1.15E-02	1.15E-05	1.00E+00	Acetaldehyde	2.7E-06	9.5E-03	2.8E-08	1.4E+02	4.0E-02	8.2E-05							
2	Conexant Systems Inc. (Generator)	4.00E-05	4.00E-08	1.00E+00	Diesel Particulate	3.0E-04	1.1E+00	1.1E-08	5.0E+00	1.4E-03	8.0E-06							
3	Mindspeed (Generator)	5.00E-05	5.00E-08	1.00E+00	Diesel Particulate	3.0E-04	1.1E+00	1.4E-08	5.0E+00	1.4E-03	1.0E-05							
4	Jazz Semiconductor (Generators)	0.00E+00	0.00E+00	1.00E+00	Diesel Particulate	3.0E-04	1.1E+00	0.0E+00	5.0E+00	1.4E-03	0.0E+00							
	(Natural Gas Combution - Boilers)	0.00E+00	0.00E+00	3.02E-05	1,3-Butadiene	1.7E-04	6.0E-01	0.0E+00	2.0E+01	5.7E-03							0.0E+00	
				2.99E-04	Acetaldehyde	2.7E-06	9.5E-03	0.0E+00	1.4E+02	4.0E-02	0.0E+00							
				1.54E-04	Acrolein			0.0E+00	3.5E-01	1.0E-04	0.0E+00							
				9.95E-01	Ammonia			0.0E+00	2.0E+02	5.7E-02	0.0E+00							
				3.81E-04	Benzene	2.9E-05	1.0E-01	0.0E+00	6.0E+01	1.7E-02		0.0E+00	0.0E+00				0.0E+00	
				4.23E-04	Ethylbenzene	2.5E-06	8.8E-03	0.0E+00	2.0E+03	5.7E-01				0.0E+00	0.0E+00	0.0E+00	0.0E+00	
				9.94E-04	Formaldehyde	6.0E-06	2.1E-02	0.0E+00	9.0E+00	2.6E-03	0.0E+00							0.0E+00
				2.84E-04	n-Hexane			0.0E+00	7.0E+03	2.0E+00		0.0E+00						
				1.93E-05	Naphthalene	3.40E-05	1.2E-01	0.0E+00	9.0E+00	2.6E-03	0.0E+00							
				1.64E-03	Toluene			0.0E+00	3.0E+02	8.6E-02	0.0E+00	0.0E+00					0.0E+00	
				1.21E-03	Xylenes			0.0E+00	7.0E+02	2.0E-01	0.0E+00	0.0E+00						0.0E+00
	(Trucking Activities)	0.00E+00	0.00E+00	1.00E+00	Diesel Particulate	3.0E-04	1.1E+00	0.0E+00	5.0E+00	1.4E-03	0.0E+00							
	(Soil Vapor Extraction System)	0.00E+00	0.00E+00	2.73E-03	Benzene	2.9E-05	1.0E-01	0.0E+00	6.0E+01	1.7E-02		0.0E+00	0.0E+00				0.0E+00	
				4.45E-03	Benzyl Chloride	4.9E-05	1.7E-01	0.0E+00	2.4E+02	6.9E-02	0.0E+00							0.0E+00
				4.05E-03	Carbon Tetrachloride	4.2E-05	1.5E-01	0.0E+00	4.0E+01	1.1E-02		0.0E+00				0.0E+00	0.0E+00	
				2.43E-02	Chloroform	5.3E-06	1.9E-02	0.0E+00	3.0E+02	8.6E-02					0.0E+00	0.0E+00	0.0E+00	
				4.72E-03	Dichlorobenzene	1.1E-05	3.9E-02	0.0E+00	8.0E+02	2.3E-01	0.0E+00	0.0E+00			0.0E+00	0.0E+00		
				3.18E-03	Dichloroethane	1.6E-06	5.6E-03	0.0E+00	9.6E+02	2.8E-01	0.0E+00				0.0E+00	0.0E+00		0.0E+00
				3.41E-02	Ethylbenzene	2.5E-06	8.8E-03	0.0E+00	2.0E+03	5.7E-01				0.0E+00	0.0E+00	0.0E+00	0.0E+00	
				5.49E-03	Ethylene Dibromide	7.1E-05	2.5E-01	0.0E+00	8.0E-01	2.3E-04							0.0E+00	
				8.04E-01	n-Hexane			0.0E+00	7.0E+03	2.0E+00		0.0E+00						
				2.24E-03	Methylene Chloride	1.0E-06	3.5E-03	0.0E+00	4.0E+02	1.1E-01		0.0E+00	0.0E+00					
				1.29E-02	Methyl t-Butyl Ether	2.6E-07	9.1E-04	0.0E+00	8.0E+03	2.3E+00					0.0E+00	0.0E+00		0.0E+00
				5.89E-03	Tetrachloroethane	5.8E-05	2.0E-01	0.0E+00	7.0E+01	2.0E-02						0.0E+00		
				5.82E-03	Tetrachloroethylene	5.9E-06	2.1E-02	0.0E+00	3.5E+01	1.0E-02					0.0E+00	0.0E+00		
				4.66E-03	Trichloroethane	1.6E-05	5.6E-02	0.0E+00	1.4E+01	4.0E-03		0.0E+00				0.0E+00		
				5.74E-02	Trichloroethylene	2.0E-06	7.0E-03	0.0E+00	6.0E+02	1.7E-01		0.0E+00						0.0E+00
				2.39E-02	Vinyl Chloride	7.8E-05	2.7E-01	0.0E+00	1.0E+02	2.9E-02	0.0E+00	0.0E+00						0.0E+00
5	Harbor Justice Center (Generator)	3.10E-04	3.10E-07	1.00E+00	Diesel Particulate	3.0E-04	1.1E+00	8.5E-08	5.0E+00	1.4E-03	6.2E-05							
	(Natural Gas Combution - Boiler)	2.66E+00	2.66E-03	2.37E-04	Acetaldehyde	2.7E-06	9.5E-03	1.6E-09	1.4E+02	4.0E-02	4.5E-06							
				1.49E-04	Acrolein			0.0E+00	3.5E-01	1.0E-04	1.1E-03							
				9.94E-01	Ammonia			0.0E+00	2.0E+02	5.7E-02	1.3E-02							
				4.42E-04	Benzene	2.9E-05	1.0E-01	3.1E-08	6.0E+01	1.7E-02		2.0E-05	2.0E-05				2.0E-05	
				5.25E-04	Ethylbenzene	2.5E-06	8.8E-03	3.2E-09	2.0E+03	5.7E-01				7.0E-07	7.0E-07	7.0E-07	7.0E-07	
				9.39E-04	Formaldehyde	6.0E-06	2.1E-02	1.4E-08	9.0E+00	2.6E-03	2.8E-04							2.8E-04
				3.48E-04	n-Hexane			0.0E+00	7.0E+03	2.0E+00		1.3E-07						
				1.66E-05	Naphthalene	3.40E-05	1.2E-01	1.4E-09	9.0E+00	2.6E-03	4.9E-06							
				2.02E-03	Toluene			0.0E+00	3.0E+02	8.6E-02	1.8E-05	1.8E-05					1.8E-05	
				1.50E-03	Xylenes			0.0E+00	7.0E+02	2.0E-01	5.7E-06	5.7E-06						5.7E-06
6	Impac Funding Co. (Generator)	5.80E-04	5.80E-07	1.00E+00	Diesel Particulate	3.0E-04	1.1E+00	1.6E-07	5.0E+00	1.4E-03	1.2E-04							
7	Kimera (Charbroiler)	2.43E-02	2.43E-05	1.00E+00	Acetaldehyde	2.7E-06	9.5E-03	6.0E-08	1.4E+02	4.0E-02	1.7E-04							
8	The Pacific Club (Charbroiler)	2.48E-02	2.48E-05	1.00E+00	Acetaldehyde	2.7E-06	9.5E-03	6.1E-08	1.4E+02	4.0E-02	1.8E-04							
9	Newport Place (Generator)	1.90E-04	1.90E-07	1.00E+00	Diesel Particulate	3.0E-04	1.1E+00	5.2E-08	5.0E+00	1.4E-03	3.8E-05							
	TOTAL							5.2E-07			1.5E-02	4.3E-05	2.0E-05	7.0E-07	7.0E-07	7.0E-07	3.8E-05	2.8E-04

** Key to Toxicological Endpoints

RESP	Respiratory System
CNS/PNS	Central/Peripheral Nervous System
CV/BL	Cardiovascular/Blood System
IMMUN	Immune System
KIDN	Kidney
GI/LV	Gastrointestinal System/Liver
REPRO	Reproductive System (e.g. teratogenic and developmental effects)
EYES	Eye irritation and/or other effects

Note: Exposure factors used to calculate contaminant intake

exposure frequency (days/year)	350
exposure duration (years)	70
exposure duration to Jazz Semiconductor (years)	-
inhalation rate (m^3/day)	19.0
average body weight (kg)	70.0
averaging time $_{(cancer)}$ (days)	25,550
averaging time $_{(noncancer)}$ (days)	25,550