SUPPORT BOLT AND FACE PLATE (4½" TOP SLAB)

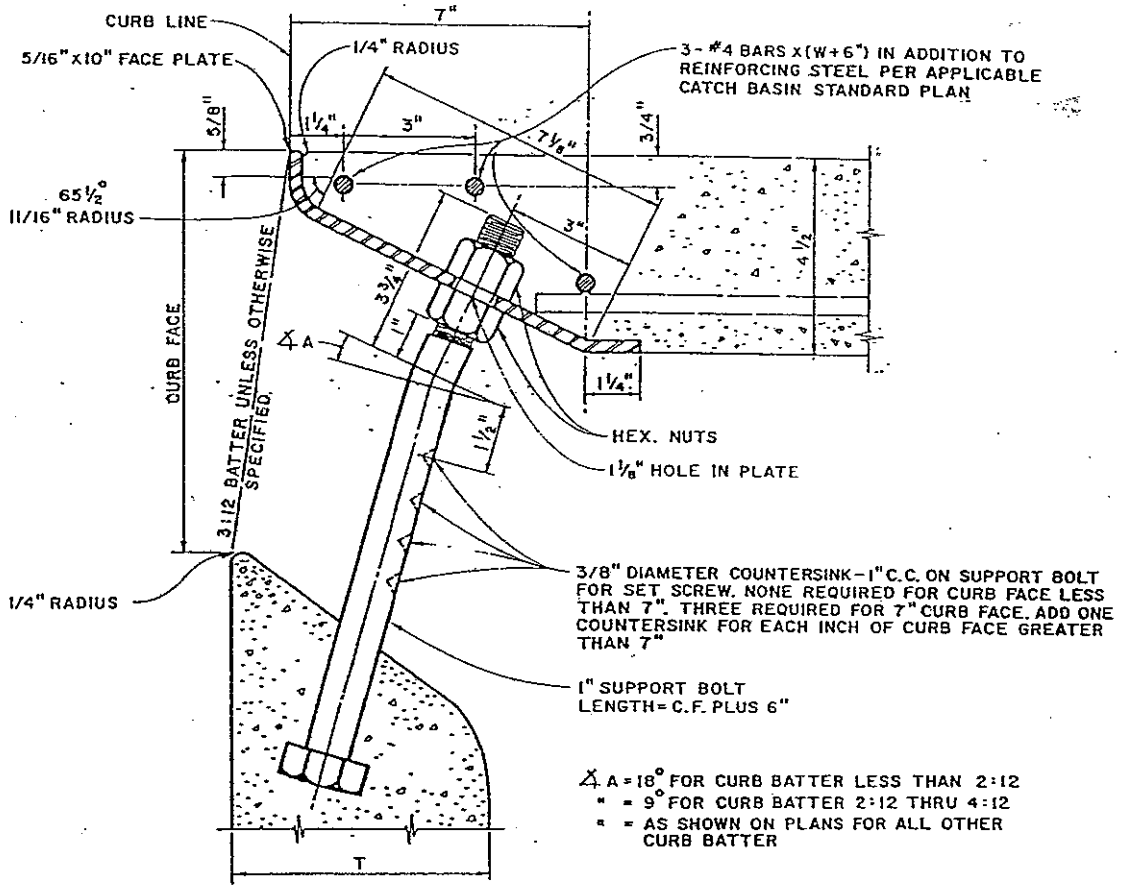

SECTION

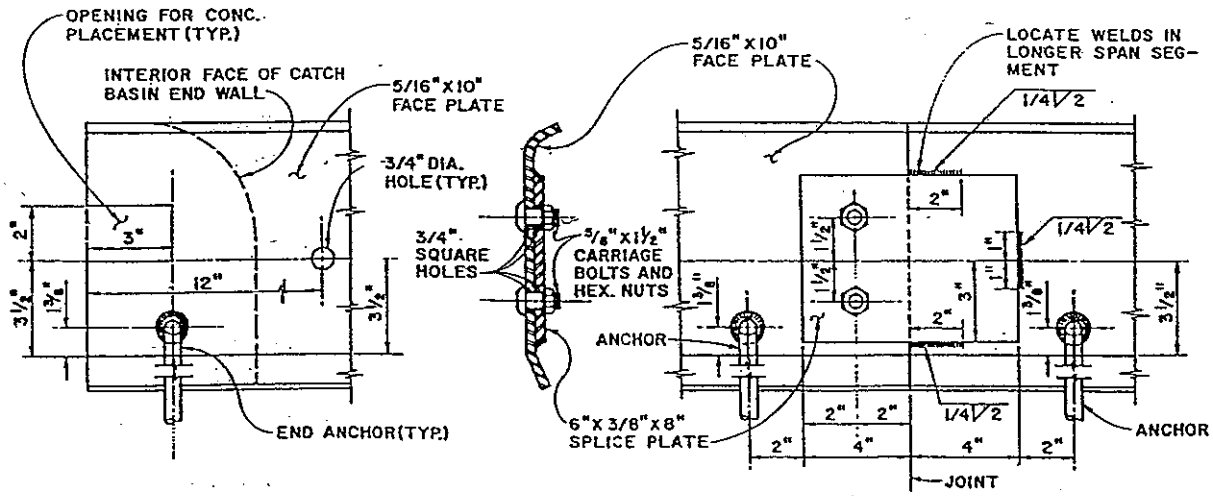

END DETAIL

SPLICE DETAIL

ADOPTED FROM AMERICAN PUBLIC WORKS ASSOCIATION STANDARD PLAN 310-0

CITY OF NEWPORT BEACH PUBLIC WORKS DEPARTMENT	DRAWN F.T. DATE 1/15/91 APPROVED
CATCH BASIN FACE PLATE ASSEMBLY AND PROTECTION BAR FOR 4-1/2" TOP SLAB	PUBLIC WORKS DIRECTOR R.E. NO. 36106 DRAWING NO. STD-316-L-A